124-5

FIRE SERVICE INCORPORATED 27006

Subsidiary of Firecom, Inc.
39-27 Fifty Ninth Street
Woodside, New York 11377
(718) 899-2311

REPORT OF FIELD SERVICE

LOCATIONS **DEVICES**

FLOOR	AREA'S		CABLE	XMTR	SENS TST	S/D
21	PASS	ELEV.	1	020	2.8	BLK
	COMM	A	1	204	3.0	BLK
	ELECT	A	1	204	3.0	BLK
	TELEPH	A	1	204	3.0	BLK
	FREIGHT	ELEV.	1	020	3.0	BLK
	ELEC	B	1	204	2.8	BLK
	COMM	B	1	204	3.0	BLK
	TELEPH	B	1	204	3.0	BLK
21	ELECT	C	1	205	3.0	BLK
	COMM	C	1	205	3.2	BLK
	TELEPH	C	1	205	3.0	BLK
	TELEPH	D	1	205	3.0	BLK
	COMM	D	1	205	3.2	BLK
	ELEC	D	1	205	3.0	BLK
21	CORE HER D/D		1	008	3.2	Hochiki
(A)	CORE HER D/D		1	008	3.2	Hochiki
	-TO BE REPLACE		(UNIT DEFECTIVE)			
21	RETURN D/D SOUTH		1	007	3.0	Hochiki
	RETURN D/D NORTH		1	007	3.2	Hochiki
13	STROBE PANEL AFC 101 (B COMM)					
	(2) BATTERIES REPLACED - (2AH) - TROUBLE / BATTERIES					

PREVENTIVE MAINTENANCE CONTRACT

INVOICE TO: W.T.C.

N.Y.C.

SERVICEMAN ASSIGNED: J. TORRES / F. ROSADO	SEE AT JOB SITE: F.S.I.
	DATE SCHEDULED: 8-22-01
CONTRACT #: S/C00818	TYPE OF SYSTEM: CSW2000
FEE SERVICE #	P.O. #
CALL AUHTORIZED BY	PHONE / EXT

☒ MAINTENANCE ☐ TEST

☒ JOB COMPLETE ☐ JOB INCOMPLETE

☐ SYSTEM ON LINE ☐ SYSTEM OFF LINE

DEPARTED SHOP	TIME IN	TIME OUT	RETURNED SHOP	TOTAL HOURS
AM PM	8:00 AM PM	4:30 AM PM	AM PM	

MATERIAL RECORD

QUANTITY	DESCRIPTION	COST
2	12 VOLTS BATTERIES	69.95

CUSTOMER NAME (PRINT)

CUSTOMER SIGNATURE Miguel Rivera

SERVICEMAN SIGNATURE J. Torres

AUTHORIZATION FOR FIRE ALARM INTERRUPTION
The undersigned has been advised by Fire Service Inc. representative that it may be necessary to interrupt the fire protection service by disconnecting the system and/or a component in the performance of their assigned work.
The undersigned hereby assumes the responsibility for the notification of the authorities at the time the interruption is initiated and will take all of the precautions deemed necessary during this period of interruption and hold harmless Fire Service Inc. and its employees regarding interruption of the protection service during their service of the equipment.

TIME DATE NAME

SERVICE PERFORMED & REMAINING: S/CONTRACT - PREVENTIVE MAINTENANCE SMOKE DETECTOR TESTS - SENSITIVITY TEST AS (SHOWN ABOVE) — LOCATIONS ON 21ST FL. — A/30 TROUBLE SHOOTED 21ST FL. DUCT DETECTOR CORE HER (1) FIRST TO BE REPLACED (SENSITIVITY OUT RANGE) — UNIT SIF24 HOCHIKI TYPE —

(A) INACCESSIBLE (B) MISSING (C) DEFECTIVE (D) OTHER

FIRE SERVICE INCORPORATED

:27007

Subsidiary of Firecom, Inc.
39-27 Fifty Ninth Street
Woodside, New York 11377
(718) 899-2311

REPORT OF FIELD SERVICE

LOCATIONS			DEVICES				
FLOOR	AREA'S			CABLE	XTNDR	TST SECS	S/D.
20	COMM	A		1	203	2.8	BLK
	ELECT	A		1	203	3.0	BLK
	TERM	A		1	203	3.0	BLK
	ELEC	B		1	203	3.0	BLK
	COMM	B		1	203	3.0	BLK
	TERM	B		1	203	3.2	BLK
	ELEV.	PASS		1	019	3.0	BLK
	ELEV.	FREIGHT		1	019	2.8	BLK
	COMM	C		1	202	3.0	BLK
	ELEC	C		1	202	2.8	BLK
	TERM	C		1	202	3.0	BLK
	ELEC	D		1	202	3.0	BLK
	COMM	D		1	202	3.2	BLK
	TERM	D		1	202	3.0	BLK
	CORE	HEL D/D		1	006	3.2	Hoffman
	CORE	HEL D/D		1	006	3.2	Hoffman
	RETURN	D/D.		1	005	3.2	Hoffman
20	RETURN	D/D.		1	005	3.0	Hoffman
	RETURN	D/D EAST	3	045	3.2	D13	
46	STROBE	PNL	'B' COMM.	Trouble			SPATIAL
	Repairing	'A' CIRCUIT	-	AS	F.S.D	-	
	PANEL	RESTORED	to NORMAL	-			

INVOICE TO: T.W.T.C.
N.Y.C.

SERVICEMAN ASSIGNED: J. TORRES / S. ROSARIO	SEE AT JOB SITE: S.D.
	DATE SCHEDULED: 8-28-01
CONTRACT #: S/C 00 818	TYPE OF SYSTEM: LJN 2000
FEE SERVICE #	P.O. #
CALL AUTHORIZED BY	PHONE / EXT
☑ MAINTENANCE	☑ TEST
☐ JOB COMPLETE	☐ JOB INCOMPLETE
☐ SYSTEM ON LINE	☐ SYSTEM OFF LINE

DEPARTED SHOP	TIME IN	TIME OUT	RETURNED SHOP	TOTAL HOURS
AM / PM	800 AM/PM	430 PM/PM	AM / PM	

AUTHORIZATION FOR FIRE ALARM INTERRUPTION
The undersigned has been advised by Fire Service Inc. representative that it may be necessary to interrupt the fire protection service by disconnecting the system and/or a component in the performance of their assigned work.
The undersigned hereby assumes the responsibility for the notification of the authorities at the time the interruption is initiated and will take all of the precautions deemed necessary during this period of interruption and hold harmless Fire Service Inc. and its employees regarding interruption of the protection service during their service of the equipment.

NAME _____ DATE _____ TIME _____

MATERIAL RECORD

QUANTITY	DESCRIPTION	COST
	PREVENTIVE MAINTENANCE CONTRACT	

CUSTOMER NAME (PRINT): Sean O'Keeffe.
CUSTOMER SIGNATURE
SERVICEMAN SIGNATURE

SERVICE PERFORMED & REMAINING: S/CONTRACT. - S/DETECTORS With. Mag Tester Sensitivity / Quarterly Semiannual Service. - Also Reports on 46th Floor STROBE PNL AFC100. 'A' Loop Circuit Correcting. - System OK / RESETED. -

(A) INACCESSIBLE (B) MISSING (C) DEFECTIVE (D) OTHER

FIRE SERVICE INCORPORATED

27064

Subsidiary of Firecom, Inc.
39-27 Fifty Ninth Street
Woodside, New York 11377
(718) 899-2311

REPORT OF FIELD SERVICE

LOCATIONS | **DEVICES**

FLOOR	Area'd			Cable	Zone/Dev	S/D	Test Sens
23	Pass Elev.			2	000	Blk	2-8
	Comm	B		2	169	Blk	3.0
	Elect	B		2	169	Blk	3.0
	Telep	B		2	169	Blk	3.0
	Elect	A		2	169	Blk	3.2
	Comm	A		2	169	Blk	3.0
	Telep	A		2	169	Blk	2.8
	Freight Elev			2	000	Blk.	3.0
	Booster D/D			2	228	Holtek	32
23	Booster D/D			2	228	Holtek	32
	Elect	C		2	168	Blk	3.0
	Comm	C		2	168	Blk	3.0
	Telep	C		2	168	Blk	3.2
	Comm	D		2	168	Blk	3.0
	Elect	D		2	168	Blk	3.0
	Telep	D		2	168	Blk	3.0
	Return D/D	Ladies		2	227	Holtek	3.4
	Return D/D	North		N/A - As previous			
23	Return D/D	South		N/A - As previous			
13	Strobe Pnl	Trouble Condition			101 Model		
	Clearing -	STATUS -					
14	Sub System Pnl Trouble - (Unit						
	in Trouble / Corrective Area - 14th Fl)						
	Zone with Listing TTB (15th Fl.) -						
	(TB6 7-8)						
	to Restore, Supv. Wires TTB When System						
	is Restored To Normal Cond TTB						

INVOICE TO: J.W.T.C. / N.Y.C.

SERVICEMAN ASSIGNED: J. Lorr / J. Rosario	SEE AT JOB SITE: F.S.D.
	DATE SCHEDULED: 8-29-01
CONTRACT #: 5/000 818	TYPE OF SYSTEM: VSN 2000
FEE SERVICE #	P.O. #
CALL AUHTORIZED BY	PHONE / EXT

☑ MAINTENANCE ☑ TEST

☐ JOB COMPLETE ☐ JOB INCOMPLETE

☐ SYSTEM ON LINE ☐ SYSTEM OFF LINE

DEPARTED SHOP	TIME IN	TIME OUT	RETURNED SHOP	TOTAL HOURS
AM PM	8:00 AM PM	4:30 AM PM	AM PM	

MATERIAL RECORD

QUANTITY	DESCRIPTION	COST
	PREVENTIVE MAINTENANCE CONTRACT	

CUSTOMER NAME (PRINT): Sean O'Keeffe

CUSTOMER SIGNATURE

SERVICEMAN SIGNATURE

AUTHORIZATION FOR FIRE ALARM INTERRUPTION
The undersigned has been advised by Fire Service Inc. representative that it may be necessary to interrupt the fire protection service by disconnecting the system and/or a component in the performance of their assigned work.
The undersigned hereby assumes the responsibility for the notification of the authorities at the time the interruption is initiated and will take all of the precautions deemed necessary during the period of interruption and hold harmless Fire Service Inc. and its employees regarding interruption of fire protection service during their service of the equipment.

NAME _____ DATE _____ TIME _____

SERVICE PERFORMED & REMAINING: Sensitivity Test / Maintenance as per Contract on 23rd Fl (Silverstein Props Bld) - As Listed Above - & Repairs on 13th 14th Fl. Sub Systems — As per F.S.D.

(A) INACCESSIBLE (B) MISSING (C) DEFECTIVE (D) OTHER

FIRE SERVICE INCORPORATED

27065

Subsidiary of Firecom, Inc.
39-27 Fifty Ninth Street
Woodside, New York 11377
(718) 899-2311

REPORT OF FIELD SERVICE

LOCATIONS | **DEVICES**

FLOOR	Corrections.		CASE	XTNR	S/D	TST SENS.
19	ELECT A		1	201	BLK	3.0
	COMM A		1	201	BLK	3.0
	TELEPH 'A'		1	201	BLK	2.8
	ELECT B		1	201	BLK	2.8
	COMM B		1	201	BLK	3.0
	TELEPH B		1	201	BLK	3.0
	ELEV LOBBY	PASS	1	018	BLK	3.0
19	FREIGHT ELEV.		1	018	BLK	3.2
	ELECT C		1	200	BLK	3.0
	COMM C		1	200	BLK	2.8
	TELEPH C		1	200	BLK	2.8
	CORE HEL	D/D	1	004	Hochiki	3.4
19	CORE HEL	D/D	1	004	Hochiki	3.2
	PLENUM RETURN	D/D	1	003	Hochiki	3.2
	PLENUM RETURN	D/D	1	003	Hochiki	3.2
	ELECT D		1	200	BLK	3.0
	COMM D		1	200	BLK	3.0
	TELEPH D		1	200	BLK	3.0

INVOICE TO: T.W.T.C
N.Y.C.

SERVICEMAN ASSIGNED: T. Dorff / F. Rosario
SEE AT JOB SITE: F.S.I
DATE SCHEDULED: 9-4-01
CONTRACT #: S/C00818
TYPE OF SYSTEM: CSN2000
FEE SERVICE #:
P.O. #:
CALL AUHTORIZED BY:
PHONE:
EXT:

☒ MAINTENANCE ☒ TEST
☐ JOB COMPLETE ☐ JOB INCOMPLETE
☐ SYSTEM ON LINE ☐ SYSTEM OFF LINE

DEPARTED SHOP	TIME IN	TIME OUT	RETURNED SHOP	TOTAL HOURS
AM PM	8:00 AM PM	4:30 AM PM	AM PM	

MATERIAL RECORD

QUANTITY	DESCRIPTION	COST
	PREVENTIVE MAINTENANCE CONTRACT	

(*) 47 WATERFLOW S/W 2 OHZ ALARM - CHECK TROUBLE SHOOTED DEVICE / TTB INPUT - DEVICE ISOLATED FROM TTB - TO BE MONITORED - (possible DEFECTIVE S/W DEVICE)

(*) 14" SMOKE PANEL SUB SYSTEM TROUBLE INPUT TRACED / CHECK - INTO A SUB SYSTEM CODE 042 IN TROUBLE STATUS / PANEL DISPLAY FOUND DEFECTIVE ZONES ISOLATED by TENANT - (MOVE-OUT.) -

CUSTOMER NAME (PRINT): D. GIACOMAZZA
CUSTOMER SIGNATURE: 9/5/01
SERVICEMAN SIGNATURE:

SERVICE PERFORMED & REMAINING: PREV. MAINTENANCE / SMOKE DETECTOR UNITS SENSITIVITY CHECK ON 19'H as per SCHEDULE at LISTED ADDRESS

(*) ALSO CHECK TROUBLE SHOOTED FLOOR 47 W/FLOW (112) ALARM DEVICE ISOLATED FROM SYSTEM - TO BE MONITORED CLASS 'E' SYSTEM. - TO BE FOLLOW UP. AND 14'H SUB SYSTEM - TO BE RESTORE TO NORMAL by TENANT (SUBMOW BALTAS)

(A) INACCESSIBLE (B) MISSING (C) DEFECTIVE (D) OTHER

(INPUT LIFTED D/ TTB SYSTEM / UNTIL S.SYTH - RESTORE NORMAL STATUS

AUTHORIZATION FOR FIRE ALARM INTERRUPTION
The undersigned has been advised by Fire Service Inc. representative that it may be necessary to interrupt the fire protection service by disconnecting the system and/or a component in the performance of their assigned work.
The undersigned hereby assumes the responsibility for the notification of the authorities at the time the interruption is initiated and will take all of the precautions deemed necessary during the period of interruption and hold harmless Fire Service Inc. and its employees regarding interruption of the protection service during their service of the equipment.

NAME DATE TIME

FIRE SERVICE INCORPORATED

27066

Subsidiary of Firecom, Inc.
39-27 Fifty Ninth Street
Woodside, New York 11377
(718) 899-2311

REPORT OF FIELD SERVICE

LOCATIONS | **DEVICES**

INVOICE TO: T.W.T.C
N.Y.C.

FLOOR	DEVICE			CABLE	XTNSN	S/D	TEST SENS
18	COMM	A		1	199	BLK	3.2
	ELECT	A		1	199	BLK	3.0
	TELEPH	A		1	199	BLK	3.0
	PASS	ELEV.		1	017	BLK	3.0
18	FREIGHT	ELEV.		1	017	BLK	3.0
	ELECT	B		1	199	BLK	3.0
	COMM	B		1	199		2.8
	TELEPH	B		1	199		3.0
	ELECT	C		1	198	BLK	3.0
	TELEPH	C		1	198		3.2
	COMM	C		1	198		3.0
	ELECT	D		1	198	BLK	2.8
	COMM	D		1	198		2.8
18	TELEPH	D		1	198		3.0
	P/ENUN	RETURN	D/D-N	1	001	Hoffk	3.2
	P/ENUN	RET.	D/D SOFA	1	001	Hoffk	3.2
	CORE	HEA	D/D	1	002	Hoffk	3.2
	CORE	HEA	D/D	1	002	Hoffk	3.4
17	PASS	ELEV.		1	016	BLK	3.0
	FREIGHT	ELEV.		1	016	BLK	3.0
	ELECT	A-B	(2)	1	197	BLK	3.0/2.8
	COMM	A-B	(2)	1	197	BLK	3.0
	TELEPH	A-B	(2)	1	197	BLK	3.0/2.8
	CORE	HEA	D/D	1	000	Hoffk	3.4
	CORE	HEA	D/D	1	000	Hoffk	3.4
	ELECT	C		1	196		
	COMM	C		1	196		
	TELEPH	C		1	196		
	TELEP	D		1	196		
	COMM	D		1	196		
	ELECT	D		1	196		
17TH	(*)	RETURN	D/D	NOT	AVAILABLE AS		
		PREVIOUS	REPORTED				

SERVICEMAN ASSIGNED: C. TORRE, F. ROSALIO
SEE AT JOB SITE: F.S.D
DATE SCHEDULED: 9-05-01
CONTRACT #: S/C 818
TYPE OF SYSTEM: LSN 2000
FEE SERVICE #: -
P.O. #:
CALL AUHTORIZED BY | PHONE | EXT:
☒ MAINTENANCE ☐ TEST
☐ JOB COMPLETE ☐ JOB INCOMPLETE
☐ SYSTEM ON LINE ☐ SYSTEM OFF LINE

DEPARTED SHOP	TIME IN	TIME OUT	RETURNED SHOP	TOTAL HOURS
AM PM	900 AM PM	430 AM PM	AM PM	

MATERIAL RECORD

QUANTITY	DESCRIPTION	COST
	PREVENTIVE MAINTENANCE CONTRACT	

CUSTOMER NAME (PRINT): J GIACOMAZZI
CUSTOMER SIGNATURE: FSD 9/5/01
SERVICEMAN SIGNATURE:

AUTHORIZATION FOR FIRE ALARM INTERRUPTION
The undersigned has been advised by Fire Service Inc. representative that it may be necessary to interrupt the fire protection service by disconnecting the system and/or a component in the performance of their assigned work.
The undersigned hereby assumes the responsibility for the notification of the authorities at the time the interruption is initiated and will take all of the precautions deemed necessary during the period of interruption and hold Harmless Fire Service Inc. and its employees regarding interruption of fire protection service during their service of the equipment.

NAME _____ DATE _____ TIME _____

SERVICE PERFORMED & REMAINING: PREVENTIVE MAINTENANCE - CLASS E FIRE SYSTEM - SMOKE DETECTOR AREAS ABOVE LISTED 18TH/17TH FLOORS SENSITIVITY TESTED.

(*) NOTE RETURN D/DETECTOR NOT AVAILABLE - NO ACCESS PROVIDED CEILING SOLID - 17TH FLOOR.

(A) ~~INACCESSIBLE~~ (B) MISSING (C) DEFECTIVE (D) OTHER

FIRE SERVICE INCORPORATED

102313

SUBSIDIARY OF FIRE ...M INC.
39-27 FIFTY NINTH STREET
WOODSIDE, NEW YORK 11377
(718) 899-2311

REPORT OF FIELD SERVICE

INVOICE TO

SERVICED
TWTC
Newyork, N.Y.

CALL AUTHORIZED BY		CONTRACT #	FEE SERVICE #	FJ #	PO #	SEE AT JOB SITE
		SC00818				F.S.D.
PHONE	EXT	DATE SCHEDULED	TIME SCHEDULED			SERVICEMAN ASSIGNED
		09-05-01	A.M.			Frank R.

MATERIAL RECORD

QUANTITY ISSUED	QUANTITY B/O	F C I NO	DESCRIPTION	UNIT PRICE	PER	TOTAL AMOUNT
			PREVENTIVE MAINTENANCE CONTRACT -			

CHECK APPROPRIATE BOX

- ☐ Q.C
- ☐ I & T
- ☐ FEE CALL
- ☐ DELIVERY
- ☐ DEMO
- ☐ EMERGENCY CALL
- ☑ CONTRACT CALL
- ☐ PICK UP
- ☐ DEMO OWNER
- ☐ SURVEY

DEPARTED SHOP	TIME IN	TIME OUT	RETURNED SHOP	TOTAL HOURS	START MILEAGE	END MILEAGE	MISC EXPENSE	CAR FARE
	8:00 A.M.	4:30 P.M.						

- ☐ MAT REQD
- ☐ PARTIAL
- ☐ OTHER
- ☐ LABOR REQD

I & T COMPLETE ☐ CALL COMPLETE ☐

SERVICE DATE: 09-05-01

WILL RETURN ON:

CUSTOMER SIGNATURE: [signature] 9/5/01

SERVICEMAN SIGNATURE: [signature]

AUTHORIZATION FOR FIRE ALARM INTERRUPTION

The undersigned has been advised by Fire Service, Inc. representative that it may be necessary to interrupt the fire protection service by disconnecting the system and/or a component in the performance of their assigned work.

The undersigned hereby assumes the responsibility for the notification of the authorities at the time the interruption is initiated and will take all of the precautions deemed necessary during the period of interruption and hold harmless Fire Service Inc. and its employees regarding interruption of the protection service during their service of the equipment.

Name

Date

PROBLEM—AS DESCRIBED

Service Maintenance

SERVICE PERFORMED

Assisting Timmy T. during performing of Pre Service Maintenance.

WORK REMAINING

FCI 155

FIRE SERVICE INCORPORATED

102312

SUBSIDIARY OF FIRE[illegible] INC.

39-27 FIFTY NINTH STREET
WOODSIDE, NEW YORK 11377
(718) 899-2311

REPORT OF FIELD SERVICE

INVOICE TO

SERVICED TWTC Woodport, NY.

CALL AUTHORIZED BY		CONTRACT #	FEE SERVICE #	FJ #	P O #	SEE AT JOB SITE
		9C00818				F.S.D.
PHONE	EXT	DATE SCHEDULED	TIME SCHEDULED			SERVICEMAN ASSIGNED
		09-04-01	A.M.			Frank R

MATERIAL RECORD

QUANTITY ISSUED	QUANTITY B/O	FCI NO	DESCRIPTION	UNIT PRICE	PER	TOTAL AMOUNT
			PREVENTIVE MAINTENANCE CONTRACT			

CHECK APPROPRIATE BOX

- ☐ O.C
- ☐ I & T
- ☐ FEE CALL
- ☐ DELIVERY
- ☐ DEMO
- ☐ EMERGENCY CALL
- ☑ CONTRACT CALL
- ☐ PICK UP
- ☐ DEMO OWNER
- ☐ SURVEY

DEPARTED SHOP	TIME IN	TIME OUT	RETURNED SHOP	TOTAL HOURS	START MILEAGE	END MILEAGE	MISC EXPENSE	CAR FARE
8:00 A.M.	9:00 A.M.	4:30 P.M.						

- ☐ MAT REQD
- ☐ PARTIAL
- ☐ OTHER
- ☐ LABOR REQD

I & T COMPLETE ☐ CALL COMPLETE ☐

SERVICE DATE: 09-04-01
WILL RETURN ON

CUSTOMER SIGNATURE: [signature] FSD 9/5/01

SERVICEMAN SIGNATURE: [signature]

AUTHORIZATION FOR FIRE ALARM INTERRUPTION

The undersigned has been advised by Fire Service Inc. representative that it may be necessary to interrupt the fire protection service by disconnecting the system and/or a component in the performance of their assigned work.

The undersigned hereby assumes the responsibility for the notification of the authorities at the time the interruption is initiated and will take all of the precautions deemed necessary during the period of interruption and hold harmless Fire Service Inc. and its employees regarding interruption of fire protection service during their service of the equipment.

Date

Name

PROBLEM—AS DESCRIBED

Service Maintainence

SERVICE PERFORMED

Assisting Jimmy T. On The Performing of The Service Maintainence.

WORK REMAINING

FCI 155
REV 6186

FIRE SERVICE INCORPORATED

97685

SUBSIDIARY OF FIRE ... M INC.

39-27 FIFTY NINTH STREET
WOODSIDE, NEW YORK 11377
(718) 899-2311

REPORT OF FIELD SERVICE

INVOICE TO

SERVICED

7 WTC
New York, NY.

CALL AUTHORIZED BY	CONTRACT #	FEE SERVICE #	F.I.#	P.O. #	SEE AT JOB SITE
	SC00818				F.S.D.

PHONE	EXT.	DATE SCHEDULED	TIME SCHEDULED	SERVICEMAN ASSIGNED
		08/15/01	AM.	Frank L.

MATERIAL RECORD

QUANTITY ISSUED	QUANTITY B/O	F.C.I. NO.	DESCRIPTION	UNIT PRICE	PER	TOTAL AMOUNT

PREVENTIVE MAINTENANCE CONTRACT

CHECK APPROPRIATE BOX

- ☐ O.C
- ☐ I & T
- ☐ FEE CALL
- ☐ DELIVERY
- ☐ DEMO
- ☐ EMERGENCY CALL
- ☑ CONTRACT CALL
- ☐ PICK UP
- ☐ DEMO OWNER
- ☐ SURVEY

DEPARTED SHOP	TIME IN	TIME OUT	RETURNED SHOP	TOTAL HOURS	START MILEAGE	END MILEAGE	MISC EXPENSE	CAR FARE
	8:00 AM.	4:30 PM.						

- ☐ MAT REQD
- ☐ PARTIAL
- ☐ OTHER
- ☐ LABOR REQD

I & T COMPLETE ☐ CALL COMPLETE ☐

SERVICE DATE: 08/15/01

WILL RETURN ON

CUSTOMER SIGNATURE: S O'Keeffe

SERVICEMAN SIGNATURE: Frank L.

AUTHORIZATION FOR FIRE ALARM INTERRUPTION

The undersigned has been advised by Fire Service, Inc. representative that it may be necessary to interrupt the fire protection service by disconnecting the system and/or a components in the performance of their assigned work.

The undersigned hereby assumes the responsibility for the notification of the authorities at the time the interruption is initiated and will take all of the precautions deemed necessary during the period of interruption and hold harmless Fire Service Inc. and its employees regarding interruption of the protection service during their service of the equipment.

Date

Name

PROBLEM—AS DESCRIBED

Service Contract

SERVICE PERFORMED

Assisting Fire Dept. on the Interpretation of the Service Contract Maintained, Kept Clean, and Consistently of the Smoke Detectors, On 24th Floor Etc.

WORK REMAINING

FCI 155
REV 6186

FIRE SERVICE INCORPORATED

97687

SUBSIDIARY OF FIRE[illegible] INC.
39-27 FIFTY NINTH STREET
WOODSIDE, NEW YORK 11377
(718) 899-2311

REPORT OF FIELD SERVICE

INVOICE TO

SERVICED

TOTG
New York, N.Y.

CALL AUTHORIZED BY		CONTRACT #	FEE SERVICE #	FJ #	PO #	SEE AT JOB SITE
		S-00818				F.G.D.
PHONE	**EXT.**	**DATE SCHEDULED**	**TIME SCHEDULED**			**SERVICEMAN ASSIGNED**
		08/22/01	11 AM.			Frank R.

MATERIAL RECORD

QUANTITY ISSUED	QUANTITY B/O	FCI NO	DESCRIPTION	UNIT PRICE	PER	TOTAL AMOUNT
			PREVENTIVE MAINTENANCE CONTRACT			

CHECK APPROPRIATE BOX

- ☐ Q.C
- ☐ I & T
- ☐ FEE CALL
- ☐ DELIVERY
- ☐ DEMO
- ☐ EMERGENCY CALL
- ☑ CONTRACT CALL
- ☐ PICK UP
- ☐ DEMO OWNER
- ☐ SURVEY

DEPARTED SHOP	TIME IN	TIME OUT	RETURNED SHOP	TOTAL HOURS	START MILEAGE	END MILEAGE	MISC EXPENSE	CAR FARE
	8:00 AM.	4:30 P.M.						

- ☐ MAT REQD
- ☐ PARTIAL
- ☐ OTHER
- ☐ LABOR REQD

I & T COMPLETE ☐ CALL COMPLETE ☐

SERVICE DATE: 08/22/01

WILL RETURN ON:

CUSTOMER SIGNATURE: Susan Rine

SERVICEMAN SIGNATURE: Frank R.

PROBLEM—AS DESCRIBED

Service Contract

SERVICE PERFORMED

Assisting Technician See the Report of F.D. Service Contract.

WORK REMAINING

AUTHORIZATION FOR FIRE ALARM INTERRUPTION

The undersigned has been advised by Fire Service, Inc. representative that it may be necessary to interrupt the fire protection service by disconnecting the system and/or a component in the performance of their assigned work.

The undersigned hereby assumes the responsibility for the notification of the authorities at the time the interruption is initiated and will take all of the precautions deemed necessary during the period of interruption and hold harmless Fire Service Inc. and its employees regarding interruption of the protection service during their service of the equipment.

Date

Name

FCI 155
REV 6186

FIRE SERVICE INCORPORATED

97688

SUBSIDIARY OF FIRE[illegible]M INC.
39-27 FIFTY NINTH STREET
WOODSIDE, NEW YORK 11377
(718) 899-2311

REPORT OF FIELD SERVICE

INVOICE TO

SERVICED

7W TF
New York, NY.

CALL AUTHORIZED BY		CONTRACT #	FEE SERVICE #	FJ #	PO #	SEE AT JOB SITE
		Sep 00 8/8				F.S.D.
PHONE	EXT.	DATE SCHEDULED	TIME SCHEDULED			SERVICEMAN ASSIGNED
		08/21/01	AM.			Frank L.

MATERIAL RECORD

QUANTITY ISSUED	QUANTITY B/O	F C I NO	DESCRIPTION	UNIT PRICE	PER	TOTAL AMOUNT
			PREVENTIVE MAINTENANCE CONTRACT			

CHECK APPROPRIATE BOX

- ☐ O.C
- ☐ I & T
- ☐ FEE CALL
- ☐ DELIVERY
- ☐ DEMO
- ☐ EMERGENCY CALL
- ☒ CONTRACT CALL
- ☐ PICK UP
- ☐ DEMO OWNER
- ☐ SURVEY

DEPARTED SHOP	TIME IN	TIME OUT	RETURNED SHOP	TOTAL HOURS	START MILEAGE	END MILEAGE	MISC EXPENSE	CAR FARE
	8:00 AM.	4:30 PM.						

- ☐ MAT REQD ☐ PARTIAL
- ☐ OTHER ☐ LABOR REQD

I & T COMPLETE ☐ CALL COMPLETE ☐

SERVICE DATE: 08/21/01

WILL RETURN ON:

CUSTOMER SIGNATURE: Miguel Rivera

SERVICEMAN SIGNATURE: Frank L.

AUTHORIZATION FOR FIRE ALARM INTERRUPTION

The undersigned has been advised by Fire Service, Inc. representative that it may be necessary to interrupt the fire protection service by disconnecting the system and/or a component in the performance of their assigned work.

The undersigned hereby assumes the responsibility for the notification of the authorities at the time the interruption is initiated and will take all of the precautions deemed necessary during the period of interruption and hold harmless Fire Service Inc. and its employees regarding restoration of the protection service during their service of the equipment.

Date

Name

PROBLEM—AS DESCRIBED

Service Contract

SERVICE PERFORMED

Assisting Tenants On The Restarting Of The Service
Satisfactorily

WORK REMAINING

FCI 155
REV 6186

FIRE SERVICE INCORPORATED

97689

SUBSIDIARY OF FIRECOM INC.

39-27 FIFTY NINTH STREET
WOODSIDE, NEW YORK 11377
(718)899-2311

REPORT OF FIELD SERVICE

INVOICE TO

SERVICED

TWTC
New York, N.Y.

CALL AUTHORIZED BY		CONTRACT #	FEE SERVICE #	FJ #	P O #	SEE AT JOB SITE
		Sco0818				F.S.D.
PHONE	EXT	DATE SCHEDULED	TIME SCHEDULED			SERVICEMAN ASSIGNED
		8/29/01	A.M.			

MATERIAL RECORD

QUANTITY ISSUED	QUANTITY B/O	F C I NO	DESCRIPTION	UNIT PRICE	PER	TOTAL AMOUNT
					PREVENTIVE MAINTENANCE CONTRACT	

CHECK APPROPRIATE BOX

- ☐ O. C
- ☐ I & T
- ☐ FEE CALL
- ☐ DELIVERY
- ☐ DEMO
- ☐ EMERGENCY CALL
- ☑ CONTRACT CALL
- ☐ PICK UP
- ☐ DEMO OWNER
- ☐ SURVEY

DEPARTED SHOP	TIME IN	TIME OUT	RETURNED SHOP	TOTAL HOURS	START MILEAGE	END MILEAGE	MISC EXPENSE	CAR FARE

- ☐ MAT RECD
- ☐ PARTIAL
- ☐ OTHER
- ☐ LABOR RECD

I & T COMPLETE ☐ CALL COMPLETE ☐

SERVICE DATE: 8/29/01

WILL RETURN ON:

CUSTOMER SIGNATURE: Sean O'Keeffe

SERVICEMAN SIGNATURE: Frank L.

AUTHORIZATION FOR FIRE ALARM INTERRUPTION

The undersigned has been advised by Fire Service, Inc., representative that it may be necessary to interrupt the fire protection service by disconnecting the system and/or a component in the performance of their assigned work.

The undersigned hereby assumes the responsibility for the notification of the authorities at the time the interruption is released and will take all of the precautions deemed necessary during the period of interruption and hold harmless Fire Service Inc. and its employees regarding interruption of fire protection service during their service of the equipment.

Date

Name

PROBLEM—AS DESCRIBED

Service Contract

SERVICE PERFORMED

Preventive Maintenance Inspection Test Per the Performing of the Service Contract.

WORK REMAINING

FCI 155
REV 6186

FIRE SERVICE INCORPORATED

97690

SUBSIDIARY OF FIRE[illegible] INC.

39-27 FIFTY NINTH STREET
WOODSIDE, NEW YORK 11377
(718) 899-2311

REPORT OF FIELD SERVICE

INVOICE TO

SERVICED

TWTC
New York, NY.

CALL AUTHORIZED BY		CONTRACT #	FEE SERVICE #	FJ #	P O #	SES AT 366 SITE
		Sec0818				F.S.I.
PHONE	EXT	DATE SCHEDULED	TIME SCHEDULED			SERVICEMAN ASSIGNED
		8/28/01	A.M.			Frank L.

MATERIAL RECORD

QUANTITY ISSUED	QUANTITY B/O	FCI NO	DESCRIPTION	UNIT PRICE	PER	TOTAL AMOUNT

PREVENTIVE MAINTENANCE CONTRACT

CHECK APPROPRIATE BOX

- ☐ Q.C
- ☐ I & T
- ☐ FEE CALL
- ☐ DELIVERY
- ☐ DEMO
- ☑ EMERGENCY CALL
- ☑ CONTRACT CALL
- ☐ PICK UP
- ☐ DEMO OWNER
- ☐ SURVEY

DEPARTED SHOP	TIME IN	TIME OUT	RETURNED SHOP	TOTAL HOURS	START MILEAGE	END MILEAGE	MISC EXPENSE	CAR FARE
	8:00 AM.	4:30 P.M.						

☐ MAT RECD ☐ PARTIAL
☐ OTHER ☐ LABOR RECD

I & T COMPLETE ☐ CALL COMPLETE ☐

SERVICE DATE: 8/28/01

WILL RETURN ON:

CUSTOMER SIGNATURE: Sean O'Keeffe

SERVICEMAN SIGNATURE: Frank L.

AUTHORIZATION FOR FIRE ALARM INTERRUPTION

The undersigned has been advised by Fire Service, Inc. representative that it may be necessary to interrupt the fire protection service by disconnecting the system and/or a component in the performance of their assigned work.

The undersigned hereby assumes the responsibility for the notification of the authorities at the time the interruption is initiated and will take all of the precautions deemed necessary during the period of interruption and hold harmless Fire Service Inc. and its employees regarding interruption of fire protection service during their service of the equipment.

Name

Date

PROBLEM—AS DESCRIBED

Service Contract

SERVICE PERFORMED

Assisting Inspector L. Del Re
Performing PM Service
Contract

WORK REMAINING

FCI 155
REV 6186

FIRE SERVICE INCORPORATED

23499

Subsidiary of Firecom, Inc.
39-27 Fifty Ninth Street
Woodside, New York 11377
(718) 899-2311

REPORT OF FIELD SERVICE

LOCATIONS			DEVICES				
FLOOR	ADDRESS	CLOSET		XTNDR	CABLE	SENS	S/D
24	PASS	ELEV.		001	2	2.8	BLK
	FREIGHT	ELEV		001	2	2.8	BLK
	COMM	A	CLOSET	171	2	3.0	BLK
	ELECT	A	"	171	2	3.0	BLK
	TELEPH	A	"	171	2	3.0	BLK
	COMM	B	"	171	2	3.0	BLK
	ELECT	B		171	2	2.8	BLK
	TELEPH	B		171	2	3.0	BLK
24	ELECT	C		173	2	3.0	BLK
	COMM	C		173	2	3.2	BLK
	TELEPH	C		173	2	3.0	BLK
	ELECT	D		173	2	2.8	BLK
	COMM	D		173	2	3.0	BLK
	TELEPH	D		173	2	3.0	BLK
	RETURN DUCT DET. NORTH			230	2	3.2	Honeywell
	RETURN DUCT DET. SOUTH			230	2	3.2	Honeywell
	BOOSTER D/D			231	2	3.2	Honeywell
25	BOOSTER D/D			231	2	3.0	Honeywell
16	STROBE PANEL			REPLACED AFC 100			
	A-B LOOPS -			BATTERIES (NEGGED)			
				(2) 12 VOLTS. -			
				TO REPLACE. -			

PREVENTIVE MAINTENANCE CONTRACT

INVOICE TO: W.T.C.
N.Y.C.

SERVICEMAN ASSIGNED: J. TORRES / F. ROSARIO	SEE AT JOB SITE: F.S.I.
	DATE SCHEDULED: 8-15-01
CONTRACT #: S1C00 818	TYPE OF SYSTEM: ZSN2000
FEE SERVICE #	P.O. #
CALL AUHTORIZED BY	PHONE / EXT

☒ MAINTENANCE ☐ TEST
☐ JOB COMPLETE ☐ JOB INCOMPLETE
☐ SYSTEM ON LINE ☐ SYSTEM OFF LINE

DEPARTED SHOP	TIME IN	TIME OUT	RETURNED SHOP	TOTAL HOURS
AM PM	800 AM PM	930 AM PM	AM PM	

MATERIAL RECORD

QUANTITY	DESCRIPTION	COST

CUSTOMER NAME (PRINT): J. TORRES
CUSTOMER SIGNATURE
SERVICEMAN SIGNATURE

AUTHORIZATION FOR FIRE ALARM INTERRUPTION
The undersigned has been advised by Fire Service Inc. representative that it may be necessary to interrupt the fire protection service by disconnecting the system and/or components in the performance of their assigned work.
The undersigned hereby assumes the responsibility for the consequences of the interruption is minimized and will take all of the precautions deemed necessary during the period of interruption and hold harmless Fire Service Inc. and its employees regarding interruption of the protection service during their service of the equipment.

TIME
DATE
X
NAME

SERVICE PERFORMED & REMAINING: As per Contract - Preventive Maintenance on Smoke Detectors 24 F. - as listed above. Sensitivity Test Service all Areas / Closets - M.E.R.'s - Elevator Lobbies. - System Back to Operation. - Also Replaced on 16 F AFC 100 Panel - as per F.S.I. Trouble Report (4 negged) (2) Batteries 12 Volts. - To replace. -

(A) INACCESSIBLE (B) MISSING (C) DEFECTIVE (D) OT

FIRE SERVICE INCORPORATED

: 23500

Subsidiary of Firecom, Inc.
39-27 Fifty Ninth Street
Woodside, New York 11377
(718) 899-2311

REPORT OF FIELD SERVICE

LOCATIONS | **DEVICES**

INVOICE TO: 7W.T.C.

N.Y.C.

22nd Fl

FLOOR	Area's -			CODE	ZONE	TEST Secs	Cleaned
22	ELEV. Lobby			1	021	3.0	✓
	ELECT	A		1	207	3.2	✓
	COMM	A		1	207	3.0	✓
	TELEPH	A		1	207	3.0	✓
	TELEPH	B		1	207	3.0	✓
	ELECT	B		1	207	2.8	✓
	COMM	B		1	207	3.0	✓
22	FREIGHT ELEV			1	021	3.2	✓
	ELECT	C		1	206	3.0	✓
	COMM	C		1	206	3.0	✓
	TELEPH	C		1	206	3.0	✓
	TELEPH	D		1	206	2.8	✓
	ELECT	D		1	206	2.8	✓
	COMM	D		1	206	3.0	✓
	RETURN DUCT DET. S.			1	009	3.2	✓
	RETURN D/D	NORTH		1	009	3.2	✓
	CORE	AREA	D/D	1	010	3.0	✓
22	CORE	AREA	D/D	1	010	3.2	✓

SERVICEMAN ASSIGNED	SEE AT JOB SITE
J. Torres	F.S.I.
F. Rosario	DATE SCHEDULED 8.21.01
CONTRACT # S/C00 818	TYPE OF SYSTEM LSN 2001
FEE SERVICE #	P.O. #
CALL AUHTORIZED BY	PHONE / EXT

☒ MAINTENANCE ☒ TEST

☐ JOB COMPLETE ☐ JOB INCOMPLETE

☐ SYSTEM ON LINE ☐ SYSTEM OFF LINE

DEPARTED SHOP	TIME IN	TIME OUT	RETURNED SHOP	TOTAL HOURS
AM PM	900 AM PM	430 AM PM	AM PM	

AUTHORIZATION FOR FIRE ALARM INTERRUPTION
The undersigned has been advised by Fire Service Inc. representatives that it may be necessary to interrupt the fire protection service by disconnecting the system and/or a component in the performance of their assigned work.
The undersigned hereby assumes the responsibility for the notification of the authorities at the time the interruption is initiated and will take all of the precautions deemed necessary during this period of interruption and hold harmless Fire Service Inc. and its employees regarding interruption of fire protection service during their service of the equipment.

TIME / DATE / NAME

16 STROBE PANEL (AFC100) CODE HER.
Replaced (2) BATTERIES 12VOLTS.
- Back up PWR. -

44 Security (Solomon Brothers) OFFICE PAN
UNIT Check For Operation / RUNNING
As per Request. -

PREVENTIVE MAINTENANCE CONTRACT

MATERIAL RECORD

QUANTITY	DESCRIPTION	COST
2	12 VOLTS BATTERIES	69.95

CUSTOMER NAME (PRINT)

CUSTOMER SIGNATURE Miguel Ramos

SERVICEMAN SIGNATURE

SERVICE PERFORMED & REMAINING 5/CONTRACT. — 0

PREVENTIVE MAINTENANCE & SENSITIVITY TEST PERFORMED ON SMOKE DETECTORS AREAS BEING LISTED ON 22nd FLOORS - (SILVERSTEIN SPACES) -

ALSO PERFORMED REPAIR IN 16th FL. (2) BATTERIES 12VOLTS REPLACED. -
FOR STROBE PNL AFC100 - (OLD BATTS DEFECTIVE). -

(A) INACCESSIBLE (B) MISSING (C) DEFECTIVE (D) OTHER

FIRE SERVICE INCORPORATED

: 23498

Subsidiary of Firecom, Inc.
39-27 Fifty Ninth Street
Woodside, New York 11377
(718) 899-2311

REPORT OF FIELD SERVICE

LOCATIONS | **DEVICES**

FLOOR	AREA	CLOSET		CABLE	XTND	S/D	SENS TEST
25	PASS	ELEV.		2	002	BIRK	3.0
	FREIGHT ELEV.			2	002	EDWDS	3.2
	ELECT	B		2	174	BLK	3.0
	COMM	B		2	174	BLK	3.0
	TELEPH	B		2	174	BLK	3.0
	ELECT	A		2	174	BLK	3.0
	COMM	A		2	174	BLK	3.0
	TELEPH	A		2	174	BLK	3.0
	ELECT	C		2	173	BLK	3.0
	COMM	C		2	173	BLK	3.2
	TELEPH	C		2	173	BLK	3.0
	ELECT	D		2	173	BLK	3.0
	COMM	D		2	173	BLK	3.2
	TELEPH	D		2	173	BLK	3.2
25	CORE	HER DUCT DET		2	233	HOTTKI	3.2
	CORE	HER DUCT DET		2	233	HOTTKI	3.4
	RETURN DUCT DET		North	232	HOTTKI	3.2
25	RETURN DUCT DET		South	232	HOTTKI	3.2
13	STROBE PNL CHECK FOR TROUBLE/RESET						
	AFC 100 PANEL - ADJUSTED OUTPUT VOLTAGE AT PANEL. -						

PREVENTIVE MAINTENANCE CONTRACT

INVOICE TO: T.W.T.C. N.Y.C.

SERVICEMAN ASSIGNED	SEE AT JOB SITE
J. TORRES / F. COSMERO	F.S.D.
CONTRACT #	DATE SCHEDULED
S/C 00 818	8-14-01
FEE SERVICE #	TYPE OF SYSTEM
	CSN 2000
CALL AUHTORIZED BY	P.O. #
	PHONE / EXT

☒ MAINTENANCE ☒ TEST
☐ JOB COMPLETE ☐ JOB INCOMPLETE
☒ SYSTEM ON LINE ☐ SYSTEM OFF LINE

DEPARTED SHOP	TIME IN	TIME OUT	RETURNED SHOP	TOTAL HOURS
800 AM/PM	9:00 AM/PM	430 AM/PM	AM/PM	

MATERIAL RECORD

QUANTITY	DESCRIPTION	COST

CUSTOMER NAME (PRINT) S. O'Keeffe
CUSTOMER SIGNATURE
SERVICEMAN SIGNATURE

AUTHORIZATION FOR FIRE ALARM INTERRUPTION
The undersigned has been advised by Fire Service Inc. representatives that it may be necessary to interrupt the fire protection service by disconnecting the system and/or a component in the performance of their assigned work.
The undersigned hereby assumes the responsibility for the notification of the authorities at the time the interruption is initiated and will take all of the precautions deemed necessary during this period of interruption and hold harmless Fire Service Inc. and its employees regarding interruption of fire protection service during their service of the equipment.

NAME _____ DATE _____ TIME _____

SERVICE PERFORMED & REMAINING: PREV. MAINTENANCE. — SENSITIVITY TEST. — SERVICE CONTRACT - ON SMOKE DETECTORS ABOVE / BELOW 11 ON 25TH FLOOR AS LISTED ABOVE - ALSO REPAIR IN STROBE PANEL 13TH B. COMM. CLOSET AFC 100 AS PER F.S.D. - REQUEST (BLG). - TROUBLE / TROUBLE RESETED. - BACK TO NORMAL. —

(A) INACCESSIBLE (B) MISSING (C) DEFECTIVE (D) OTHER

FIRE SERVICE INCORPORATED

103631

SUBSIDIARY OF FI[illegible]OM INC.

39-27 FIFTY NINTH STREET
WOODSIDE, NEW YORK 11377
(718)899-2311

REPORT OF FIELD SERVICE

INVOICE TO

SERVICED

7 WTC
NY. NY.

CALL AUTHORIZED BY	CONTRACT #	FEE SERVICE #	FJ #	P O #	SEE ALSO JOB SITE
Shop	818				7WTC
PHONE / EXT	DATE SCHEDULED	TIME SCHEDULED			SERVICEMAN ASSIGNED
	7/3/01	am/pm			

MATERIAL RECORD

QUANTITY ISSUED	QUANTITY B/O	FCI NO	DESCRIPTION	UNIT PRICE	PER	TOTAL AMOUNT
			PREVENTIVE MAINTENANCE CONTRACT			

CHECK APPROPRIATE BOX

- ☐ Q.C
- ☐ I & T
- ☐ FEE CALL
- ☐ DELIVERY
- ☐ DEMO
- ☑ EMERGENCY CALL
- ☐ CONTRACT CALL
- ☐ PICK UP
- ☐ DEMO OWNER
- ☐ SURVEY

DEPARTED SHOP	TIME IN	TIME OUT	RETURNED SHOP	TOTAL HOURS	START MILEAGE	END MILEAGE	MISC EXPENSE	CAR FARE
8 am	9 am	3:30 pm	4:30 pm					

☐ MAT REQD ☐ PARTIAL ☐ OTHER ☐ LABOR REQD

SERVICE DATE 7/03/01

CUSTOMER SIGNATURE L. Mercado

I & T COMPLETE ☐ CALL COMPLETE ☐

WILL RETURN ON

SERVICEMAN SIGNATURE

PROBLEM—AS DESCRIBED — trouble call —

SERVICE PERFORMED Assisted technician Jimmy T.
for more information see report #
16th floor strobe panel & 46th floor elev. lobby det.
Trouble status repairs.
System Operational

WORK REMAINING

FCI 155
REV 6186

AUTHORIZATION FOR FIRE ALARM INTERRUPTION

The undersigned has been advised by Fire Service Inc. representative that it may be necessary to interrupt the fire protection service by disconnecting the system and/or a component in the performance of their assigned work.
The undersigned hereby assumes the responsibility for the notification of the authorities at the time the interruption is initiated and will take all of the precautions deemed necessary during the period of interruption and hold harmless Fire Service Inc. and its employees regarding interruption of the protection service during their service of the equipment.

Date

Name

FIRE SERVICE INCORPORATED

97626

SUBSIDIARY OF FI. ..OM INC.
39-27 FIFTY NINTH STREET
WOODSIDE, NEW YORK 11377
(718)899-2311

REPORT OF FIELD SERVICE

INVOICE TO

SERVICED
T.W.T.C. -
N.Y.C.

CALL AUTHORIZED BY	CONTRACT #	FEE SERVICE #	FJ #	PO #	SEE AT JOB SITE
K.W.	0818				F.S.D.
PHONE / **EXT**	**DATE SCHEDULED**	**TIME SCHEDULED**			**SERVICEMAN ASSIGNED**
	7-2-01	AM			J-TORRES

MATERIAL RECORD

QUANTITY ISSUED	QUANTITY B/O	F C I NO	DESCRIPTION	UNIT PRICE	PER	TOTAL AMOUNT
			PREVENTIVE MAINTENANCE CONTRACT			

CHECK APPROPRIATE BOX

- ☐ Q.C
- ☐ I & T
- ☐ FEE CALL
- ☐ DELIVERY
- ☐ DEMO
- ☐ EMERGENCY CALL
- ☑ CONTRACT CALL
- ☐ PICK UP
- ☐ DEMO OWNER
- ☐ SURVEY

DEPARTED SHOP	TIME IN	TIME OUT	RETURNED SHOP	TOTAL HOURS	START MILEAGE	END MILEAGE	MISC EXPENSE	CAR FARE
800	900	3:30						
AM		PM						

- ☐ MAT RECD ☐ PARTIAL
- ☐ OTHER ☐ LABOR RECD

SERVICE DATE: 7-2-01

CUSTOMER SIGNATURE: J. Mercado

I & T COMPLETE ☐ CALL COMPLETE ☐

WILL RETURN ON

SERVICEMAN SIGNATURE

AUTHORIZATION FOR FIRE ALARM INTERRUPTION

The undersigned has been advised by Fire Service, Inc. representative that it may be necessary to interrupt the fire protection service by disconnecting the system and/or a component in the performance of their assigned work.

The undersigned hereby assumes the responsibility for the notification of the authorities at the time the interruption is initiated and will take all of the precautions deemed necessary during the period of interruption and hold harmless Fire Service Inc. and its employees regarding interruption of fire protection service during their service of the equipment.

Date

Name

PROBLEM—AS DESCRIBED Repairs As per Previous S/Contract Reports. / STROBE.

SERVICE PERFORMED S/Contract - Check Troubleshooted 39th Floor Strobe Panel Defective Circuits 'A' - 'B' - Wiring Check Found (1) Unit with Broke Wire Wall Type (Wallock) on 'B' Circuit / and Loose E.O.L. on 'A' Circuit by Restrooms. - Circuits Rewired Back in Operation / Strobe Back in Operation

WORK REMAINING

FCI 155
REV 6186

FIRE SERVICE INCORPORATED

103630

SUBSIDIARY OF FI. . :OM INC.
39-27 FIFTY NINTH STREET
WOODSIDE, NEW YORK 11377
(718) 899-2311

REPORT OF FIELD SERVICE

INVOICE TO

SERVICED

7 WTC
NY NY

CALL AUTHORIZED BY		CONTRACT #	FEE SERVICE #	FJ #	PO #	SEE AT JOB SITE
Shop		60#				F/D
PHONE	EXT.	DATE SCHEDULED	TIME SCHEDULED			SERVICEMAN ASSIGNED
		7/02/	am / pm			

MATERIAL RECORD

QUANTITY ISSUED	QUANTITY B/O	FCI NO	DESCRIPTION	UNIT PRICE	PER	TOTAL AMOUNT
			PREVENTIVE MAINTENANCE CONTRACT			

CHECK APPROPRIATE BOX

- ☐ O.C
- ☐ I & T
- ☐ FEE CALL
- ☐ DELIVERY
- ☐ DEMO
- ☑ EMERGENCY CALL
- ☐ CONTRACT CALL
- ☐ PICK UP
- ☐ DEMO OWNER
- ☐ SURVEY

DEPARTED SHOP	TIME IN	TIME OUT	RETURNED SHOP	TOTAL HOURS	START MILEAGE	END MILEAGE	MISC EXPENSE	CAR FARE
8 am	9 am	3:30 pm	4:30 pm					

☐ MAT REQD ☐ PARTIAL
☐ OTHER ☐ LABOR REQD

SERVICE DATE: 7/02/01

CUSTOMER SIGNATURE: [signature]

I & T COMPLETE ☐ CALL COMPLETE ☐

WILL RETURN ON

SERVICEMAN SIGNATURE: [signature]

PROBLEM—AS DESCRIBED — Trouble call —

SERVICE PERFORMED Assisted technician Jimmy.
For more information see report #

System Operational

WORK REMAINING

AUTHORIZATION FOR FIRE ALARM INTERRUPTION

The undersigned has been advised by Fire Service, Inc. representative that it may be necessary to interrupt the fire protection service by disconnecting the system and/or a component in the performance of their assigned work.

The undersigned hereby assumes the responsibility for the notification of the authorities of the time the interruption is initiated and will take all of the precautions deemed necessary during the period of interruption and hold harmless of the Service Inc. and its employees regarding interruption of the [illegible]

FIRE SERVICE INCORPORATED

97625

SUBSIDIARY OF FIRE[illegible]M INC.
39-27 FIFTY NINTH STREET
WOODSIDE, NEW YORK 11377
(718)899-2311

REPORT OF FIELD SERVICE

INVOICE TO

SERVICED
7WTC
New York, N.Y.

CALL AUTHORIZED BY		CONTRACT #	FEE SERVICE #	FJ #	PO #	SEE AT JOB SITE
		Sco8B				F-S-I.
PHONE	EXT.	DATE SCHEDULED	TIME SCHEDULED			SERVICEMAN ASSIGNED
		06-27-2001	AM.			Frank L.

MATERIAL RECORD

QUANTITY ISSUED	QUANTITY B/O	FCI NO	DESCRIPTION	UNIT PRICE	PER	TOTAL AMOUNT
			PREVENTIVE MAINTENANCE CONTRACT			

CHECK APPROPRIATE BOX

- ☐ Q.C
- ☐ I & T
- ☐ FEE CALL
- ☐ DELIVERY
- ☐ DEMO
- ☐ EMERGENCY CALL
- ☑ CONTRACT CALL
- ☐ PICK UP
- ☐ DEMO OWNER
- ☐ SURVEY

DEPARTED SHOP	TIME IN	TIME OUT	RETURNED SHOP	TOTAL HOURS	START MILEAGE	END MILEAGE	MISC EXPENSE	CAR FARE
	8:00 AM.	4:30 PM.						

- ☐ MAT REQD ☐ PARTIAL
- ☐ OTHER ☐ LABOR REQD

I & T COMPLETE ☐ CALL COMPLETE ☐

SERVICE DATE: 06-27-2001
WILL RETURN ON:

CUSTOMER SIGNATURE: Sean O'Keefe
SERVICEMAN SIGNATURE: Frank L.

AUTHORIZATION FOR FIRE ALARM INTERRUPTION

The undersigned has been advised by Fire Service, Inc. representative that it may be necessary to interrupt the fire protection service by disconnecting the system and/or a component in the performance of their assigned work.
The undersigned hereby assumes the responsibility for the notification of the authorities of the time the interruption is initiated and will take all of the precautions deemed necessary during the period of interruption and hold harmless Fire Service Inc. and its employees regarding interruption of fire protection service during their service of the equipment.

Date

PROBLEM—AS DESCRIBED

Service Contract

SERVICE PERFORMED

Assisting Jerry Tyler, the Performing Tech. the Service Contract.

WORK REMAINING

FIRE SERVICE INCORPORATED

97623

SUBSIDIARY OF FIRECOM INC.

39-27 FIFTY NINTH STREET
WOODSIDE, NEW YORK 11377
(718) 899-2311

REPORT OF FIELD SERVICE

INVOICE TO

SERVICED
7WTC
West York, NY.

CALL AUTHORIZED BY		CONTRACT #	FEE SERVICE #	FJ #	P O #	SEE AT JOB SITE
		SC00818				F.S.D.
PHONE	EXT.	DATE SCHEDULED	TIME SCHEDULED			SERVICEMAN ASSIGNED
		06-26-2001	P.M.			Frank R.

MATERIAL RECORD

QUANTITY ISSUED	QUANTITY B/O	F C I NO	DESCRIPTION	UNIT PRICE	PER	TOTAL AMOUNT
			PREVENTIVE MAINTENANCE CONTRACT			

CHECK APPROPRIATE BOX

- ☐ Q.C
- ☐ I & T
- ☐ FEE CALL
- ☐ DELIVERY
- ☐ DEMO
- ☐ EMERGENCY CALL
- ☑ CONTRACT CALL
- ☐ PICK UP
- ☐ DEMO OWNER
- ☐ SURVEY

DEPARTED SHOP	TIME IN	TIME OUT	RETURNED SHOP	TOTAL HOURS	START MILEAGE	END MILEAGE	MISC EXPENSE	CAR FARE
	8:00 A.M.	4:30 P.M.						

☐ MAT REQD ☐ PARTIAL
☐ OTHER ☐ LABOR REQD

SERVICE DATE: 06-26-2001

WILL RETURN ON:

I & T COMPLETE ☐ CALL COMPLETE ☐

CUSTOMER SIGNATURE: Sean O'Keeffe

SERVICEMAN SIGNATURE: Frank R.

AUTHORIZATION FOR FIRE ALARM INTERRUPTION

The undersigned has been advised by Fire Service, Inc. representative that it may be necessary to interrupt the fire protection service by disconnecting the system and/or a component in the performance of their assigned work.

The undersigned hereby assumes the responsibility for the notification of the authorities at the time the interruption is initiated and will take all of the precautions deemed necessary during the period of interruption and hold harmless Fire Service Inc. and its employees regarding interruption of fire protection service during their service of the equipment.

Date

X

Name

PROBLEM—AS DESCRIBED

Service Contract

SERVICE PERFORMED

Preventive Maintenance Test and Inspection of the Fire Alarm System per Contract.

WORK REMAINING

FCI 155

FIRE SERVICE INCORPORATED

97624

SUBSIDIARY OF FIR[illegible]M INC.

39-27 FIFTY NINTH STREET
WOODSIDE, NEW YORK 11377
(718) 899-2311

REPORT OF FIELD SERVICE

INVOICE TO

SERVICED

TWT
New York, NY

CALL AUTHORIZED BY	CONTRACT #	FEE SERVICE #	FJ #	P.O. #	SEE AT JOB SITE
	S00818				F.S.J.

PHONE	EXT	DATE SCHEDULED	TIME SCHEDULED	SERVICEMAN ASSIGNED
		06-25-2001	P.M.	Frank L.

MATERIAL RECORD

QUANTITY ISSUED	QUANTITY B/O	F.C.I. NO	DESCRIPTION	UNIT PRICE	PER	TOTAL AMOUNT
			PREVENTIVE MAINTENANCE CONTRACT			

CHECK APPROPRIATE BOX

- ☐ O.C
- ☐ I & T
- ☐ FEE CALL
- ☐ DELIVERY
- ☐ DEMO
- ☐ EMERGENCY CALL
- ☑ CONTRACT CALL
- ☐ PICK UP
- ☐ DEMO OWNER
- ☐ SURVEY

DEPARTED SHOP	TIME IN	TIME OUT	RETURNED SHOP	TOTAL HOURS	START MILEAGE	END MILEAGE	MISC EXPENSE	CAR FARE
8:00 A.M.	9:00 A.M.	3:30 P.M.	4:30 P.M.					

- ☐ MAT REQD
- ☐ PARTIAL
- ☐ OTHER
- ☐ LABOR REQD

I & T COMPLETE ☐ CALL COMPLETE ☐

SERVICE DATE: 06-25-2001

WILL RETURN ON:

CUSTOMER SIGNATURE: Sean O'Keeffe

SERVICEMAN SIGNATURE: Frank L.

PROBLEM—AS DESCRIBED

Service Contract

SERVICE PERFORMED

Assisting Raphael Gadgero in the installation of the new LD-40 Ricoh Printer on 44th floor Security Office and Downloading the System at the F.C.S. and also Assisting Nino Fuzo Moving the Panels down 44th floor South to 44th floor.

WORK REMAINING

AUTHORIZATION FOR FIRE ALARM INTERRUPTION

The undersigned has been advised by Fire Service, Inc. representative that it may be necessary to interrupt the fire protection service by disconnecting the system and/or a component in the performance of their assigned work.

The undersigned hereby assumes the responsibility for the notification of the authorities at the time the interruption is initiated and will take all of the precautions deemed necessary during the period of interruption and hold harmless Fire Service Inc. and its employees regarding interruption of the protection service during their service of the equipment.

Date

Name

FCI 155
REV 6/86

FIRE SERVICE INCORPORATED

97617

SUBSIDIARY OF FIRECOM INC.
39-27 FIFTY NINTH STREET
WOODSIDE, NEW YORK 11377
(718)899-2311

REPORT OF FIELD SERVICE

INVOICE TO

SERVICED
7WTC
New York, N.Y.

CALL AUTHORIZED BY	CONTRACT #	FEE SERVICE #	F.I.#	P.O.#	SEE AT JOB SITE
	SC00818				F.S.D.
PHONE / **EXT**	**DATE SCHEDULED**	**TIME SCHEDULED**			**SERVICEMAN ASSIGNED**
	06-20-2001	A.M.			Frank L.

MATERIAL RECORD

QUANTITY ISSUED	QUANTITY B/O	F.C.I. NO.	DESCRIPTION	UNIT PRICE	PER	TOTAL AMOUNT
			PREVENTIVE MAINTENANCE CONTRACT			

CHECK APPROPRIATE BOX

- ☐ Q.C
- ☐ I & T
- ☐ FEE CALL
- ☐ DELIVERY
- ☐ DEMO
- ☐ EMERGENCY CALL
- ☑ CONTRACT CALL
- ☐ PICK UP
- ☐ DEMO OWNER
- ☐ SURVEY

DEPARTED SHOP	TIME IN	TIME OUT	RETURNED SHOP	TOTAL HOURS	START MILEAGE	END MILEAGE	MISC EXPENSE	CAR FARE
	8:00 AM	4:30 PM.						

- ☐ MAT. REQD ☐ PARTIAL
- ☐ OTHER ☐ LABOR REQD

I & T COMPLETE ☐ CALL COMPLETE ☐

SERVICE DATE: 06-20-2001
WILL RETURN ON:

CUSTOMER SIGNATURE: Sean O'Keeffe
SERVICEMAN SIGNATURE: Frank L.

AUTHORIZATION FOR FIRE ALARM INTERRUPTION

The undersigned has been advised by Fire Service, Inc. representative that it may be necessary to interrupt the fire protection service by disconnecting the system and/or a component in the performance of their assigned work.

The undersigned hereby assumes the responsibility for the notification of the authorities at the time the interruption is initiated and will take all of the precautions deemed necessary during the period of interruption and hold harmless Fire Service Inc. and its employees regarding interruption of fire protection service during their service of the equipment.

Date

Name

PROBLEM—AS DESCRIBED

Service Contract

SERVICE PERFORMED

Assisting Firms Doing the Monitoring of the Service Contract.

WORK REMAINING

FCI 155
REV 6186

FIRE SERVICE INCORPORATED

: 23496

Subsidiary of Firecom, Inc.
39-27 Fifty Ninth Street
Woodside, New York 11377
(718) 899-2311

REPORT OF FIELD SERVICE

LOCATIONS | **DEVICES**

FLOOR				W/STA	SPK	STRB	M/STA
34	TENANT SPACE			✓	✓	✓	ACTIV.
						BATTERIES	
33	TENANT SPACE			✓	✓	✓ (1) LIGHT OUT	ACTIV.
32	TENANT SPACE.			✓	✓	✓	ACTIV.
31	TENANT SPACE.			✓	✓	✓ (1) LIGHT OUT	ACTIV.
30	TENANT SPACE.			✓	✓	✓	ACTIV.
29	TENANT SPACE.			✓	✓	✓	ACTIV.
28	TENANT SPACE.			✓	✓	✓	ACTIV.
27	TENANT SPACE.			✓	✓	✓	ACTIV.
26	TENANT SPACE.			✓	✓	✓	ACTIV.
34	CONF. B	STROBE PWR (101) - TRBL.					
	REPAIRED	REPLACED (2) 12 VLT BATTERIES					

INVOICE TO: 7 W.T.C.
SILVERSTEIN PROP.
N.Y.C
(SLOMO BARKEY)

SERVICEMAN ASSIGNED	SEE AT JOB SITE
J. TORRES / F. ROSARIO	F.S.I.
DATE SCHEDULED	6-20-01
CONTRACT #	S/C 00 818
TYPE OF SYSTEM	LSN 2000
FEE SERVICE #	P.O. #
CALL AUHTORIZED BY	PHONE / EXT

☒ MAINTENANCE ☐ TEST
☐ JOB COMPLETE ☐ JOB INCOMPLETE
☐ SYSTEM ON LINE ☐ SYSTEM OFF LINE

DEPARTED SHOP	TIME IN	TIME OUT	RETURNED SHOP	TOTAL HOURS
AM PM	800 AM PM	430 AM PM	AM PM	

MATERIAL RECORD

QUANTITY	DESCRIPTION	COST
	PREVENTIVE MAINTENANCE CONTRACT	

CUSTOMER NAME (PRINT) Sean O'Keeffe.
CUSTOMER SIGNATURE
SERVICEMAN SIGNATURE

AUTHORIZATION FOR FIRE ALARM INTERRUPTION
The undersigned has been advised by Fire Service Inc. representative that it may be necessary to interrupt the fire protection service by disconnecting the system and/or a component in the performance of their assigned work.
The undersigned hereby assumes the responsibility for the notification of the authorities at the time the interruption is initiated and will take all of the precautions deemed necessary during this period of interruption and hold harmless Fire Service Inc. and its employees regarding interruption of the protection service during their service of the equipment.

NAME DATE TIME

SERVICE PERFORMED & REMAINING SERVICE CONTRACT - CHECK/TESTED AS per BLD ACCESS / TENANT AUDIO / COMMUNICATIONS / SPEAKERS / PAGE & STROBES LIGHTS - W/STATIONS. - ON FLOOR'S (ABOVE LISTED). - SYSTEM ACK / RESET.

(#) NOTE: to Repair (1) STROBE LIGHT on 33rd Fl. by Hailey. - 31st Fl (1) Strobe Light to repair by File Room. - To Follow up. -

(A) INACCESSIBLE (B) MISSING (C) DEFECTIVE (D) OTHER

FIRE SERVICE INCORPORATED

97619

SUBSIDIARY OF FIRECOM INC.

39-27 FIFTY NINTH STREET
WOODSIDE, NEW YORK 11377
(718)899-2311

REPORT OF FIELD SERVICE

INVOICE TO

SERVICED

TWTC
New York, N.Y.

CALL AUTHORIZED BY	CONTRACT #	FEE SERVICE #	FJ #	P O #	SEE AT JOB SITE
	Sep0818				F.S.D.

PHONE	EXT.	DATE SCHEDULED	TIME SCHEDULED	SERVICEMAN ASSIGNED
		06-19-2001	A.M.	Frank L.

MATERIAL RECORD

QUANTITY ISSUED	QUANTITY B/O	FCI NO	DESCRIPTION	UNIT PRICE	PER	TOTAL AMOUNT
			PREVENTIVE MAINTENANCE CONTRACT			

CHECK APPROPRIATE BOX

- ☐ Q.C
- ☐ I & T
- ☐ FEE CALL
- ☐ DELIVERY
- ☐ DEMO
- ☐ EMERGENCY CALL
- ☑ CONTRACT CALL
- ☐ PICK UP
- ☐ DEMO OWNER
- ☐ SURVEY

DEPARTED SHOP	TIME IN	TIME OUT	RETURNED SHOP	TOTAL HOURS	START MILEAGE	END MILEAGE	MISC EXPENSE	CAR FARE
	8:00 A.M.	4:30 P.M.						

- ☐ MAT REQD
- ☐ PARTIAL
- ☐ OTHER
- ☐ LABOR REQD

I & T COMPLETE ☐ CALL COMPLETE ☐

SERVICE DATE: 06-19-2001

WILL RETURN ON:

CUSTOMER SIGNATURE: Sean O'Keeffe

SERVICEMAN SIGNATURE: Frank L.

PROBLEM—AS DESCRIBED

Service Contract

SERVICE PERFORMED

Assisting Tower Crew Dec.
the Testing of the Service
Contract.

WORK REMAINING

AUTHORIZATION FOR FIRE ALARM INTERRUPTION

The undersigned has been advised by Fire Service, Inc. representative that it may be necessary to interrupt the fire protection service by disconnecting the system and/or a component in the performance of their assigned work.

The undersigned hereby assumes the responsibility for the notification of the authorities at the time the interruption is initiated and will take all of the precautions deemed necessary during the period of interruption and hold harmless Fire Service Inc. and its employees regarding interruption of fire protection service during their service of the equipment.

X

Date

Name

FCI 155

FIRE SERVICE INCORPORATED

23495

Subsidiary of Firecom, Inc.
39-27 Fifty Ninth Street
Woodside, New York 11377
(718) 899-2311

REPORT OF FIELD SERVICE

LOCATIONS		DEVICES			
FLOOR		W/STA	SPKR	STROBE	H/STA ACTIV.
48	PLANT	✓	✓	✓= Rep.	✓
47	TENANT SPACE	✓	✓	✓-Out	✓
46	TENANT SPACE.	X	✓	✓-1/2 Out	✓
45	TENANT SPACE	X	✓	✓	✓
44	TENANT SPACE	✓	✓	✓	✓
43	TENANT SPACE	✓	✓	✓	✓
42	TENANT SPACE	✓	✓	✓	✓
41	TENANT SPACE	✓	✓	✓	✓
40	TENANT SPACE	✓	✓	✓	✓
39	TENANT SPACE	✓	✓ 'A' Out 'B' Stable	X Out	✓
38	TENANT SPACE	✓	✓	✓	✓
37	TENANT SPACE	✓	✓	✓	✓
36	TENANT SPACE	✓	✓	✓	✓
35	TENANT SPACE	✓	✓	✓	✓

INVOICE TO: T.W.T.C.
Silverstein. Prop.
N.Y.C.
(SO/ARW Sil. Bldg. TENANT.

SERVICEMAN ASSIGNED: J. Tomas / F. Rosario

SEE AT JOB SITE: F.S.D.

DATE SCHEDULED: 6-19-01

CONTRACT #: SC 00818

TYPE OF SYSTEM: LSN 2000

FEE SERVICE # –

P.O. #

CALL AUHTORIZED BY | PHONE | EXT

☒ MAINTENANCE ☐ TEST

☐ JOB COMPLETE ☐ JOB INCOMPLETE

☐ SYSTEM ON LINE ☐ SYSTEM OFF LINE

DEPARTED SHOP	TIME IN	TIME OUT	RETURNED SHOP	TOTAL HOURS
8 AM PM	9 AM PM	4:30 AM PM	AM PM	

MATERIAL RECORD

QUANTITY	DESCRIPTION	COST
	PREVENTIVE MAINTENANCE CONTRACT	

CUSTOMER NAME (PRINT): Sean O'Keeffe.

CUSTOMER SIGNATURE

SERVICEMAN SIGNATURE: J. Tomas

AUTHORIZATION FOR FIRE ALARM INTERRUPTION
The undersigned has been advised by Fire Service Inc. representative that it may be necessary to interrupt the fire protection service by disconnecting the system and/or a component in the performance of the assigned work.
The undersigned hereby assumes the responsibility for the notification of the authorities at the time the interruption is initiated and will take all of the precautions deemed necessary during the period of interruption and hold harmless Fire Service Inc. and its employees regarding interruption of the protection service during their service of the equipment.

NAME DATE TIME

SERVICE PERFORMED & REMAINING: Service Contract. As per Bld Access / Tenant proceeded to check / testing of: Warden's Stations - Speakers Page Audio / Communications and Strobe Light Activation on Floor's - As (Listed) Above System Acknowledge - / Activation / Reset's. –

(*) NOTE: To Repair & Follow up on Floor's 48' Strobe Pnl Operate - 47'Fl (1) Spk Out / Strobe 46' Fl. Strobe Light Ckt (A) Out. – 39'Fl Spk Out 'B' Strobe Ala / Strobe Activ. – Out. –

(A) INACCESSIBLE (B) MISSING (C) DEFECTIVE (D) OTHER

FIRE SERVICE INCORPORATED

97615

SUBSIDIARY OF FIREZOOM INC.

39-27 FIFTY NINTH STREET
WOODSIDE, NEW YORK 11377
(718) 899-2311

REPORT OF FIELD SERVICE

INVOICE TO

SERVICED

JWT
New York, N.Y.

CALL AUTHORIZED BY		CONTRACT #	FEE SERVICE #	FJ #	P.O. #	SEE AT JOB SITE
		Se00818				F.S.D.
PHONE	**EXT**	**DATE SCHEDULED**	**TIME SCHEDULED**			**SERVICEMAN ASSIGNED**
		06-13-2001	P.M.			Frank

MATERIAL RECORD

QUANTITY ISSUED	QUANTITY B/O	F C I NO	DESCRIPTION	UNIT PRICE	PER	TOTAL AMOUNT
			PREVENTIVE MAINTENANCE CONTRACT			

CHECK APPROPRIATE BOX

- ☐ Q.C
- ☐ I & T
- ☐ FEE CALL
- ☐ DELIVERY
- ☐ DEMO
- ☐ EMERGENCY CALL
- ☑ CONTRACT CALL
- ☐ PICK UP
- ☐ DEMO OWNER
- ☐ SURVEY

DEPARTED SHOP	TIME IN	TIME OUT	RETURNED SHOP	TOTAL HOURS	START MILEAGE	END MILEAGE	MISC EXPENSE	CAR FARE
	8:00 A.M.	4:30 P.M.						

- ☐ MAT REQD
- ☐ PARTIAL
- ☐ OTHER
- ☐ LABOR REQD

I & T COMPLETE ☐ CALL COMPLETE ☐

SERVICE DATE: 06-13-2001

WILL RETURN ON:

CUSTOMER SIGNATURE:

SERVICEMAN SIGNATURE: Frank L.

PROBLEM—AS DESCRIBED

Service Contract

SERVICE PERFORMED

Checking Devices See the Performing of the Service Contract

WORK REMAINING

AUTHORIZATION FOR FIRE ALARM INTERRUPTION

The undersigned has been advised by Fire Service, Inc. representative that it may be necessary to interrupt the fire protection service by disconnecting the system and/or a component in the performance of their assigned work.

The undersigned hereby assumes the responsibility for the notification of the authorities at the time the interruption is initiated and will take all of the precautions deemed necessary during the period of interruption and hold harmless Fire Service Inc. and its employees regarding interruption of the protection service during their service of the equipment.

Date

FIRE SERVICE INCORPORATED

23494

Subsidiary of Firecom, Inc.
39-27 Fifty Ninth Street
Woodside, New York 11377
(718) 899-2311

REPORT OF FIELD SERVICE

LOCATIONS			DEVICES				
FLOOR				CABLE	XMTR	S/D	CLEAN TEST
3RD	WEST	HER		3	006	PEC3T	✓
	WEST	HER		3	006	PEC3T	✓
	SECURITY	CLOSET		3	048	PEC3	✓
	DUCT DET	KITCHEN		3	042	EDWDS	✓
	(SUPPLY	CEILING/	RENOM)				
3RD	W. HER	D/D	FAN	3	040	EDWDS	✓
	W. HER	D/D	FAN	3	040	EDWDS	✓
	W. HER	D/D	FAN	3	040	EDWDS	✓
	W. HER	D/D	FAN	3	041	EDWDS	✓ (A)
(R)	(INSTALL	S10) -	UNIT	Replace	old	N/S	
3RD	CONF.	AREA		1	077	DI-3	✓
	RECEPT.	AREA		1	077	DI-3	✓
	ELEV	LOBBY		3	029	PEC3	✓
2	FAN	RM	D/D	1	014	EDWDS	✓
2	ELEV.	LOBBY		3	028	PEC3	✓
2	ELEV.	LOBBY		3	005	PEC3T	✓
1ST	PLANT	HER	D/D	3	039	EDWDS	✓
1ST	PLANT	HER	D/D	3	037	EDWDS	✓
1ST	PLANT	HER	AREA	1	012	PEC3T	✓

PREVENTIVE MAINTENANCE CONTRACT

INVOICE TO: T.W.T.C.
(Solomon Smith Barney)
N.Y.C.

SERVICEMAN ASSIGNED: L. TORRES / F. ROSARIO	SEE AT JOB SITE: 4.5.0
	DATE SCHEDULED: 6-13-01
CONTRACT #: SC 00818	TYPE OF SYSTEM: LSN 2000
FEE SERVICE #	P.O. #
CALL AUHTORIZED BY	PHONE / EXT

☒ MAINTENANCE ☒ TEST
☒ JOB COMPLETE ☐ JOB INCOMPLETE
☐ SYSTEM ON LINE ☐ SYSTEM OFF LINE

DEPARTED SHOP	TIME IN	TIME OUT	RETURNED SHOP	TOTAL HOURS
AM PM	8:00 AM PM	4:30 PM	AM PM	

MATERIAL RECORD

QUANTITY	DESCRIPTION	COST

CUSTOMER NAME (PRINT): Miguel Rivera
CUSTOMER SIGNATURE:
SERVICEMAN SIGNATURE:

AUTHORIZATION FOR FIRE ALARM INTERRUPTION
The undersigned has been advised by Fire Service Inc. representative that it may be necessary to interrupt the fire protection service by disconnecting the system and/or a component in the performance of their assigned work.
The undersigned hereby assumes the responsibility for the notification of the authorities at the time the interruption is initiated and will take all of the precautions deemed necessary during this period of interruption and hold harmless Fire Service Inc. and its employees regarding interruption of fire protection service during their service of the equipment.

NAME / DATE / TIME

SERVICE PERFORMED & REMAINING: As per Contract. Test Maintenance on Smoke Detection Class E System in Areas Floors 3rd 2nd 1st as (Listed Above). - System Ack/Reset Back to Open.
(R) NOTE: W.HER. D/D (041) Unit Replaced Wires - Cold Defective N/S

(A) INACCESSIBLE (B) MISSING (C) DEFECTIVE (D) OTHER
Unit Suddenly Is Bad.

FIRE SERVICE INCORPORATED

23493

Subsidiary of Firecom, Inc.
39-27 Fifty Ninth Street
Woodside, New York 11377
(718) 899-2311

REPORT OF FIELD SERVICE

LOCATIONS | **DEVICES**

FLOOR	AREA'S . CLOSET'S		CABLE	XTNDR	S/D	TST CLEAN
5	PASS ELEV.		1	004	BLK	✓
	FREIGHT		1	004	BLK	✓
	ELECT	A	1	169	BLK	✓
	TELEPH	A	1	169	BLK	✓
	ELECT	B	1	169	BLK	✓
	COMM	B	1	169	BLK	✓
	ELECT	C	1	169	BLK	✓
	ELECT	F	1	169	BLK	✓
	ROTO	CLONE AREA	3	013	PEL3T	✓
	ROTO	CLONE AREA	3	013	PEL3T	✓
4	ELECT	B	1	167	BLK	✓
	TELEPH	B	1	167	BLK	✓
	COMM	B	1	167	BLK	✓
	TELEPH	A	1	167	BLK	✓
	ELECT	A	1	167	BLK	✓
	ELECT	6	3	050	PEL3	✓
	MAIN	PASS ELEV.	1	003	BLK	✓
	FREIGHT ELEV.		1	003	BLK	✓
	CHIEF'S OFF. D/D		3	043	EDWDI	✓

PREVENTIVE MAINTENANCE CONTRACT

INVOICE TO: 7 W.T.C.
N.Y.C
(Solomon Brothers / Smith Barney)

SERVICEMAN ASSIGNED	SEE AT JOB SITE
J. TOLINO / F. Dorsaw	F.S.I.
DATE SCHEDULED	6-12-01
CONTRACT #	S/C 00 818
TYPE OF SYSTEM	LSN 2000
FEE SERVICE #	P.O. #
CALL AUHTORIZED BY	PHONE / EXT

☒ MAINTENANCE ☐ TEST
☐ JOB COMPLETE ☐ JOB INCOMPLETE
☐ SYSTEM ON LINE ☐ SYSTEM OFF LINE

DEPARTED SHOP	TIME IN	TIME OUT	RETURNED SHOP	TOTAL HOURS
AM PM	800 AM PM	4:30 AM PM	AM PM	

MATERIAL RECORD

QUANTITY	DESCRIPTION	COST
2	ALARM'S LOG'S BOOKS	45 EACH
4	12 VLTS BATTERIES	6.95 EACH
	(STROBE'S PANEL'S)	

CUSTOMER NAME (PRINT) Mario Rivera
CUSTOMER SIGNATURE
SERVICEMAN SIGNATURE

AUTHORIZATION FOR FIRE ALARM INTERRUPTION
The undersigned has been advised by Fire Service Inc. representative that it may be necessary to interrupt the fire protection service by disconnecting the system and/or a component in the performance of their assigned work.
The undersigned hereby assumes the responsibility for the notification of the authorities at the time the interruption is initiated and will take all of the precautions deemed necessary during this period of interruption and hold harmless Fire Service Inc. and its employees regarding interruption of fire protection service during their service of the equipment.

TIME
DATE
NAME

SERVICE PERFORMED & REMAINING

S/CONTRACT, S/DETECTORS ON FLOOR'S 5 + 4. - (Solomon Brothers / Smith Barney) AREAS - CLOSET'S AS LISTED. - UNITS TESTED / CLEANED. - SYSTEM ACK / RESETED. -

(*) ALSO DELIVERED (2) ALARM'S LOG'S BOOK'S AS REQUESTED F.I.P. / RLD. - & (4) BATTERIES TO BE REPLACED AT STROBE PANEL'S (BACK UP PWR). -

(A) INACCESSIBLE (B) MISSING (C) DEFECTIVE (D) OTHER

FIRE SERVICE INCORPORATED

97668

SUBSIDIARY OF FIRECOM INC.
39-27 FIFTY NINTH STREET
WOODSIDE, NEW YORK 11377
(718) 899-2311

REPORT OF FIELD SERVICE

INVOICE TO

SERVICED

TWTC
New York, N.Y.

CALL AUTHORIZED BY	CONTRACT #	FEE SERVICE #	F.J #	P.O #	SEE AT JOB SITE
	S000818				F.S.I.
PHONE / **EXT**	**DATE SCHEDULED**	**TIME SCHEDULED**			**SERVICEMAN ASSIGNED**
	06-12-2001	P.M.			Frank R.

MATERIAL RECORD

QUANTITY ISSUED	QUANTITY B/O	F.C.I NO	DESCRIPTION	UNIT PRICE	PER	TOTAL AMOUNT

PREVENTIVE MAINTENANCE CONTRACT

CHECK APPROPRIATE BOX

- ☐ Q.C
- ☐ I & T
- ☐ FEE CALL
- ☐ DELIVERY
- ☐ DEMO
- ☐ EMERGENCY CALL
- ☑ CONTRACT CALL
- ☐ PICK UP
- ☐ DEMO OWNER
- ☐ SURVEY

DEPARTED SHOP	TIME IN	TIME OUT	RETURNED SHOP	TOTAL HOURS	START MILEAGE	END MILEAGE	MISC EXPENSE	CAR FARE
	8:00 AM.	4:00 P.M.						

- ☐ MAT RECD
- ☐ PARTIAL
- ☐ OTHER
- ☐ LABOR RECD

SERVICE DATE: 06-12-2001

WILL RETURN ON

CUSTOMER SIGNATURE

SERVICEMAN SIGNATURE: Frank R.

I&T COMPLETE ☐ CALL COMPLETE ☐

AUTHORIZATION FOR FIRE ALARM INTERRUPTION

The undersigned has been advised by Fire Service, Inc. representative that it may be necessary to interrupt the fire protection service by disconnecting the system and/or a component in the performance of their assigned work.

The undersigned hereby assumes the responsibility for the notification of the authorities at the time the interruption is initiated and will take all of the precautions deemed necessary during the period of interruption and hold harmless Fire Service Inc. and its employees regarding interruption of the protection service during their service of the equipment.

Date

Name

PROBLEM—AS DESCRIBED

Service Contract

SERVICE PERFORMED

Assisting Tower Fire Dept. In performing of the Service Contract Also Testing Batteries and Alarm Panel for TWTC.

WORK REMAINING

FCI 155
REV 6186

FIRE SERVICE INCORPORATED

23492

Subsidiary of Firecom, Inc.
39-27 Fifty Ninth Street
Woodside, New York 11377
(718) 899-2311

REPORT OF FIELD SERVICE

LOCATIONS | **DEVICES**

FLOOR	AREA			CABLE	XTNDR	S/D	TST CLEAN
26	ELECT	A		2	178	BLK	✓
	COMM	A		2	178	BLK	✓
	TELEPH	A		2	178	BLK	✓
	COMM	B		2	178	BLK	✓
	ELECT	B		2	178	BLK	✓
	TELEPH	B		2	178	BLK	✓
	PASS ELEV.		(003)	2	003	BLK	✓
	COMM	C		2	175	BLK	✓
	ELECT	C		2	175	BLK	✓
	TELEPH	C		2	175	BLK	✓
	ELECT	D		2	175	BLK	✓
	COMM	D		2	175	BLK	✓
	TELEPH	D		2	175	BLK	✓
	FREIGHT ELEV		(003)	2	003	BLK	✓
	CORE HER D/D.			2	235	SIF24	✓
	CORE HER D/D.			2	235	SIF24	✓
	RETURN D/D NORTH			2	234	SIF24	✓
	RETURN D/D SOUTH			2	234	SIF24	✓
26	RET. D/D LADIES RM			NO ACCESS. —			
	BLD TO PROVIDE FUTURE. — NEXT. —						
44	PEMATION PNL/TROUBLE - TERMINATION AT						
	TTB (44'FL) LIFTED - WIRES) DUE TO MULTIPLE						
	TROUBLE/ALM'S - SUB CONTRACTOR TO CLEAR SUB SYST						
	PEMATION PNL. - REPAIRED —						
	- TO RESTORE WIRED SUPV. - WHEN COMPLETE —						

INVOICE TO: J.W.T.C. N.Y.C.

SERVICEMAN ASSIGNED: J. Torres / F. Fossatio	SEE AT JOB SITE: F.S.I.
	DATE SCHEDULED: 6-6-01
CONTRACT #: S/C 00 818	TYPE OF SYSTEM: LSN 2000
FEE SERVICE #	P O #
CALL AUHTORIZED BY	PHONE / EXT
☒ MAINTENANCE	☐ TEST
☐ JOB COMPLETE	☐ JOB INCOMPLETE
☐ SYSTEM ON LINE	☐ SYSTEM OFF LINE

DEPARTED SHOP	TIME IN	TIME OUT	RETURNED SHOP	TOTAL HOURS
AM PM	800 AM PM	430 AM PM	AM PM	

MATERIAL RECORD

QUANTITY	DESCRIPTION	COST
	PREVENTIVE MAINTENANCE CONTRACT	

CUSTOMER NAME (PRINT)

CUSTOMER SIGNATURE

SERVICEMAN SIGNATURE

AUTHORIZATION FOR FIRE ALARM INTERRUPTION
The undersigned has been advised by Fire Service Inc. representative that it may be necessary to interrupt the fire protection service by disconnecting the system and/or a component in the performance of their assigned work.
The undersigned hereby assumes the responsibility for the notification of the authorities at the time the interruption is initiated and will take all of the precautions deemed necessary during the period of interruption and hold harmless Fire Service Inc. and its employees regarding interruption of the protection service during their service of the equipment.

NAME DATE TIME

SERVICE PERFORMED & REMAINING: SERVICE CONTRACT - PREV MAINTENANCE & REPAIRS AT LISTED DESK. — SMOKE DETECTOR ALARM'S SERVICED ON 26'FL. AREA CLOSETS ERD LOBBIES MAIN F.C. STATION ALARM'S ACKNOLEDGED - RESETS PROPERLY. — SYSTEM BACK IN OPERATION. —

(A) INACCESSIBLE (B) MISSING (C) DEFECTIVE

FIRE SERVICE INCORPORATED

97667

SUBSIDIARY OF FIRECOM INC.
39-27 FIFTY NINTH STREET
WOODSIDE, NEW YORK 11377
(718)899-2311

REPORT OF FIELD SERVICE

INVOICE TO

SERVICED
TWTC
New York, NY.

CALL AUTHORIZED BY	CONTRACT #	FEE SERVICE #	FJ #	P O #	SEE AT JOB SITE
	000818				F.S.I.
PHONE / EXT	DATE SCHEDULED	TIME SCHEDULED			SERVICEMAN ASSIGNED
	06-04-2001	A.M.			Frank L.

MATERIAL RECORD

QUANTITY ISSUED	QUANTITY B/O	FCI NO	DESCRIPTION	UNIT PRICE	PER	TOTAL AMOUNT
			PREVENTIVE MAINTENANCE CONTRACT			

CHECK APPROPRIATE BOX

- ☐ Q.C
- ☐ I & T
- ☐ FEE CALL
- ☐ DELIVERY
- ☐ DEMO
- ☐ EMERGENCY CALL
- ☒ CONTRACT CALL
- ☐ PICK UP
- ☐ DEMO OWNER
- ☐ SURVEY

DEPARTED SHOP	TIME IN	TIME OUT	RETURNED SHOP	TOTAL HOURS	START MILEAGE	END MILEAGE	MISC EXPENSE	CAR FARE
	8:00 AM.	4:30 PM.						

- ☐ MAT REQD ☐ PARTIAL
- ☐ OTHER ☐ LABOR REQD

I & T COMPLETE ☐ CALL COMPLETE ☐

SERVICE DATE: 06-06-2001
WILL RETURN ON:
CUSTOMER SIGNATURE: James Capuglia
SERVICEMAN SIGNATURE: Frank L.

AUTHORIZATION FOR FIRE ALARM INTERRUPTION

The undersigned has been advised by Fire Service Inc. representative that it may be necessary to interrupt the fire protection service by disconnecting the system and/or a components in the performance of their assigned work.

The undersigned hereby assumes the responsibility for the notification of the authorities at the time the interruption is initiated and will take all of the precautions deemed necessary during this period of interruption and hold harmless Fire Service Inc. and its employees regarding interruption of fire protection service during their service of the equipment.

Name

Date

PROBLEM—AS DESCRIBED

Service Contract

SERVICE PERFORMED

Assisting Service Tech
In performing of the Service
Contract.

WORK REMAINING

FCI 155
REV 6186

FIRE SERVICE INCORPORATED

97666

SUBSIDIARY OF FI[illegible]COM INC.

39-27 FIFTY NINTH STREET
WOODSIDE, NEW YORK 11377
(718) 899-2311

REPORT OF FIELD SERVICE

INVOICE TO

SERVICED
7 WTC
New York, N.Y.

CALL AUTHORIZED BY		CONTRACT #	FEE SERVICE #	FJ #	PO #	SEE AT JOB SITE
		SC00818				F.S.D.
PHONE	EXT	DATE SCHEDULED	TIME SCHEDULED			SERVICEMAN ASSIGNED
		06-04-2001	A.M.			Frank L.

MATERIAL RECORD

QUANTITY ISSUED	QUANTITY B/O	FCI NO	DESCRIPTION	UNIT PRICE	PER	TOTAL AMOUNT

PREVENTIVE MAINTENANCE CONTRACT

CHECK APPROPRIATE BOX

- ☐ O.C
- ☐ I & T
- ☐ FEE CALL
- ☐ DELIVERY
- ☐ DEMO
- ☐ EMERGENCY CALL
- ☑ CONTRACT CALL
- ☐ PICK UP
- ☐ DEMO OWNER
- ☐ SURVEY

DEPARTED SHOP	TIME IN	TIME OUT	RETURNED SHOP	TOTAL HOURS	START MILEAGE	END MILEAGE	MISC EXPENSE	CAR FARE
8:00 A.M.	9:00 AM	3:30 PM.	4:30 PM.					

- ☐ MAT REQD
- ☐ PARTIAL
- ☐ OTHER
- ☐ LABOR REQD

I & T COMPLETE ☐ CALL COMPLETE ☐

SERVICE DATE: 06-04-2001

WILL RETURN ON

CUSTOMER SIGNATURE: James Carpenter

SERVICEMAN SIGNATURE: Frank L.

AUTHORIZATION FOR FIRE ALARM INTERRUPTION

The undersigned has been advised by Fire Service, Inc. representative that it may be necessary to interrupt the fire protection service by disconnecting the system and/or a component in the performance of their assigned work.

The undersigned hereby assumes the responsibility for the notification of the authorities at the time the interruption is initiated and will take all of the precautions deemed necessary during the period of interruption and hold harmless Fire Service Inc. and its employees regarding interruption of the protection service during their service of the equipment.

Date

Name

PROBLEM—AS DESCRIBED

Service Contract

SERVICE PERFORMED

Assisting Security Officer
Re-Starting of the Service
Contract L. 1/1

WORK REMAINING

FCI 155
REV 6186

FIRE SERVICE INCORPORATED

84035

SUBSIDIARY OF F. ...M INC.

39-27 FIFTY NINTH STREET
WOODSIDE, NEW YORK 11377
(718) 899-2311

REPORT OF FIELD SERVICE

INVOICE TO

SERVICED

7WTC.
Emergency Service.

SUNDAY

CALL AUTHORIZED BY	CONTRACT #	FEE SERVICE #	FJ #	PO #	SEE AT JOB SITE
Service.	Se 818				FSD- Angel

PHONE	EXT	DATE SCHEDULED	TIME SCHEDULED	SERVICEMAN ASSIGNED
		22 April 2001		Newell

MATERIAL RECORD

QUANTITY ISSUED	QUANTITY B/O	F C I NO	DESCRIPTION	UNIT PRICE	PER	TOTAL AMOUNT
			CONTRACT TROUBLE CALL			

CHECK APPROPRIATE BOX

- ☐ Q. C
- ☐ I & T
- ☐ FEE CALL
- ☐ DELIVERY
- ☐ DEMO
- ☐ EMERGENCY CALL
- ☐ CONTRACT CALL
- ☐ PICK UP
- ☐ DEMO OWNER
- ☐ SURVEY

DEPARTED SHOP	TIME IN	TIME OUT	RETURNED SHOP	TOTAL HOURS	START MILEAGE	END MILEAGE	MISC EXPENSE	CAR FARE
930	1045	1100	1200	4.00				

☐ MAT REQD ☐ PARTIAL
☐ OTHER ☐ LABOR REQD

I & T COMPLETE ☐ CALL COMPLETE ☐

SERVICE DATE: 22 Apr. 12001

WILL RETURN ON:

CUSTOMER SIGNATURE: x R. Mercado

SERVICEMAN SIGNATURE: S. C Newell

AUTHORIZATION FOR FIRE ALARM INTERRUPTION

The undersigned has been advised by Fire Service, Inc. representative that it may be necessary to interrupt the fire protection service by disconnecting the system and/or a component in the performance of their assigned work.

The undersigned hereby assumes the responsibility for the notification of the authorities at the time the interruption is initiated and will take all of the precautions deemed necessary during the period of interruption and hold harmless Fire Service Inc. and its employees regarding interruption of the protection service during their service of the equipment.

Date

Name

PROBLEM—AS DESCRIBED

Emergency Service.

SERVICE PERFORMED 930 dead beep. Contact service and customer. Customer reports FCS Lite up 8500 Interface board trouble. Need service ASAP. 10:45 arrived at jobsite. Met with Security FSD Checked FCS. No Trouble (6) SUPV (0) ASBL. Checked trouble list. 8500 IF # 240 in trouble cond sub noops. Reset 8500 IF - Trouble reset, However F.C.S. display locked up in trouble restart System Performance checked F.C.S -OK (65) Trouble (6) Supv. Fire ALARM system DACCON LINE CALL Completed.

WORK REMAINING

FCI 155

FIRE SERVICE INCORPORATED

97664

SUBSIDIARY OF FI[illegible]COM INC.

39-27 FIFTY NINTH STREET
WOODSIDE, NEW YORK 11377
(718) 899-2311

REPORT OF FIELD SERVICE

INVOICE TO

SERVICED

7 WTC
New York, N.Y.

CALL AUTHORIZED BY		CONTRACT #	FEE SERVICE #	FJ #	P O #	SEE AT JOB SITE
		Sec0818				FSD
PHONE	**EXT**	**DATE SCHEDULED**	**TIME SCHEDULED**			**SERVICEMAN ASSIGNED**
		05-30-01	A.M.			Frank L.

MATERIAL RECORD

QUANTITY ISSUED	QUANTITY B/O	F C I NO	DESCRIPTION	UNIT PRICE	PER	TOTAL AMOUNT
			PREVENTIVE MAINTENANCE CONTRACT			

CHECK APPROPRIATE BOX

- ☐ O. C
- ☐ I & T
- ☐ FEE CALL
- ☐ DELIVERY
- ☐ DEMO
- ☐ EMERGENCY CALL
- ☑ CONTRACT CALL
- ☐ PICK UP
- ☐ DEMO OWNER
- ☐ SURVEY

DEPARTED SHOP	TIME IN	TIME OUT	RETURNED SHOP	TOTAL HOURS	START MILEAGE	END MILEAGE	MISC EXPENSE	CAR FARE
	8:00 AM.	5:30 P.M.						

- ☐ MAT REQD
- ☐ PARTIAL
- ☐ OTHER
- ☐ LABOR REQD

SERVICE DATE: 05-30-01

WILL RETURN ON:

I & T COMPLETE ☐ CALL COMPLETE ☐

CUSTOMER SIGNATURE

SERVICEMAN SIGNATURE: Frank L.

AUTHORIZATION FOR FIRE ALARM INTERRUPTION

The undersigned has been advised by Fire Service, Inc. representative that it may be necessary to interrupt the fire protection service by disconnecting the system and/or a component in the performance of their assigned work.

The undersigned hereby assumes the responsibility for the notification of the authorities at the time the interruption is initiated and will take all of the precautions deemed necessary during the period of interruption and hold harmless Fire Service Inc. and its employees regarding interruption of the protection service during their service of the equipment.

Date

Name

PROBLEM—AS DESCRIBED

Service Contract

SERVICE PERFORMED

Assisted Tony Lopez
Per the Supervisor on the
Service Contract.

WORK REMAINING

FCI 155
REV 6186

FIRE SERVICE INCORPORATED

23485

Subsidiary of Firecom, Inc.
39-27 Fifty Ninth Street
Woodside, New York 11377
(718) 899-2311

REPORT OF FIELD SERVICE

LOCATIONS | **DEVICES**

INVOICE TO: W.T.C. / N.Y.C. / Solomon Floor

FLOOR				CABLE	XTNDR	TEST CLEAN	S/D
29	PASS/FREIGHT		(2)	2	006	✓	BLK
	ELECT	A-B	(2)	2	182	✓	BLK
	TELEPH	A-B	(2)	2	182	✓	BLK
	COMM	A-B	(2)	2	182	✓	BLK
	ELECT	D.W		2	181	✓	BLK
	ELECT	G/SEC	(2)	3	007	✓	PEC3
	ELECT	C-D	(2)	2	181	✓	BLK
	TELEPH	C-D	(2)	2	181	✓	BLK
	COMM	C		2	181	✓	BLK
	ELECT	F					
	SHUTTLE ELEV.			3	030	✓	PEC3
(5)	CORE WER AREA		(3)	2	240	✓	PEC3T
(6)	CORE WER D/D.		(2)	3	000	✓ SIF	SIF24
	W. WER AREA		(2)	3	032	✓	EDWIS
28	PASS/FREIGHT		(2)	2	005	✓	EDWIS
	ELECT	A-B	(2)	2	180	✓	BLK
	COMM	A-B	(2)	2	180	✓	BLK
	TELEPH	A-B	(2)	2	180	✓	BLK
	ELECT	C-D	(2)	2	179	✓	BLK
	COMM	C-D	(2)	2	179	✓	BLK
	TELEPH/COMM	C	(1)	2	179	✓	BLK.
	ELECT	D.W.	(1)	2	179	✓	PEC3
	ELECT	F					
	ELECT	G		2	180	✓	PEC 3
(7)	SECURITY CLOSET	NO S/D.		NO WIRING EXISTING			
	SHUTTLE ELEV.			2	005	✓	PEC3
	CORE WER D/D.			2	239	✓	SIF 24
	CORE WER D/D			2	239	✓	SIF 24
	W. WER AREA		(3)	3	057	✓	PEC3T
	W. WER DIRECT.			3	047	✓	DT-3

PREVENTIVE MAINTENANCE CONTRACT

SERVICEMAN ASSIGNED: J. TORRES / F. PASSARO

SEE AT JOB SITE: F.S.D.

DATE SCHEDULED: 5-22-01

CONTRACT #: S/C00818

TYPE OF SYSTEM: LSN 2000

FEE SERVICE #:

P.O. #:

CALL AUHTORIZED BY | PHONE | EXT

☒ MAINTENANCE ☒ TEST

☐ JOB COMPLETE ☐ JOB INCOMPLETE

☐ SYSTEM ON LINE ☐ SYSTEM OFF LINE

DEPARTED SHOP	TIME IN	TIME OUT	RETURNED SHOP	TOTAL HOURS
8:30 AM PM	9:00 AM PM	4:30 AM PM	AM PM	

MATERIAL RECORD

QUANTITY	DESCRIPTION	COST

CUSTOMER NAME (PRINT): SEAN O'KEEFE

CUSTOMER SIGNATURE:

SERVICEMAN SIGNATURE:

AUTHORIZATION FOR FIRE ALARM INTERRUPTION
The undersigned has been advised by Fire Service Inc. representative that it may be necessary to interrupt the fire protection service by disconnecting the system and/or a component in the performance of their assigned work.
The undersigned hereby assumes the responsibility for the notification of the authorities at the time the interruption is initiated and will take all of the precautions deemed necessary during this period of interruption and hold harmless Fire Service Inc. and its employees regarding interruption of the protection service during the service of the equipment.

NAME / DATE / TIME

SERVICE PERFORMED & REMAINING: SERVICE RUNTEST. CHECK/TEST CLEANING S/DETECTION ON FLOORS 29/28TH FLOORS OTHER AS LISTED. — NOTE 29TH FL. CORE WER DUCT DET. (1) UNIT & (1) AREA CEILING NO SAFE ACCESS TO MAINTENANCE/SERVICE DUE TO HIGH VOLTAGE RISER POWER EXPOSED BY UNITS. — 28TH FL. (FOUND) SECURITY CLOSET WITH NO S/D. PROTECTION AS PREVIOUS REPORTED. — SYSTEM ACK/RESETED BACK TO OPERATIONAL/NORMAL.

(A) INACCESSIBLE (B) MISSING (C) DEFECTIVE (D) OTHER

FIRE SERVICE INCORPORATED

84206

SUBSIDIARY OF FireCOM INC.
39-27 FIFTY NINTH STREET
WOODSIDE, NEW YORK 11377
(718) 899-2311

REPORT OF FIELD SERVICE

INVOICE TO

SERVICED
7 WTC
New York, N.Y.

CALL AUTHORIZED BY		CONTRACT #	FEE SERVICE #	FJ #	PO #	SEE AT JOB SITE
		SC00818				F.S.D
PHONE	EXT	DATE SCHEDULED	TIME SCHEDULED			SERVICEMAN ASSIGNED
		05-23-2001	A.M.			Frank L.

MATERIAL RECORD

QUANTITY ISSUED	QUANTITY B/O	FCI NO	DESCRIPTION	UNIT PRICE	PER	TOTAL AMOUNT
					PREVENTIVE MAINTENANCE CONTRACT	

CHECK APPROPRIATE BOX

- ☐ Q.C
- ☐ I & T
- ☐ FEE CALL
- ☐ DELIVERY
- ☐ DEMO
- ☐ EMERGENCY CALL
- ☑ CONTRACT CALL
- ☐ PICK UP
- ☐ DEMO OWNER
- ☐ SURVEY

DEPARTED SHOP	TIME IN	TIME OUT	RETURNED SHOP	TOTAL HOURS	START MILEAGE	END MILEAGE	MISC EXPENSE	CAR FARE
	8:00 A.M.	4:30 P.M.						

- ☐ MAT REQD ☐ PARTIAL
- ☐ OTHER ☐ LABOR REQD

I & T COMPLETE ☐ CALL COMPLETE ☐

SERVICE DATE: 05-23-2001

WILL RETURN ON:

CUSTOMER SIGNATURE: Sean O'Kee

SERVICEMAN SIGNATURE: Frank L.

AUTHORIZATION FOR FIRE ALARM INTERRUPTION

The undersigned has been advised by Fire Service, Inc. representative that it may be necessary to interrupt the fire protection service by disconnecting the system and/or a component in the performance of their assigned work.

The undersigned hereby assumes the responsibility for the notification of the authorities at the time the interruption is initiated and will take all of the precautions deemed necessary during the period of interruption and hold harmless Fire Service Inc. and its employees regarding interruption of fire protection service during that service of the equipment.

Date

PROBLEM—AS DESCRIBED

Service Contract

SERVICE PERFORMED

Assisting Jimmy Fong on the performing of the Service Contract

WORK REMAINING

FIRE SERVICE INCORPORATED

84207

SUBSIDIARY OF FI...COM INC.

39-27 FIFTY NINTH STREET
WOODSIDE, NEW YORK 11377
(718) 899-2311

REPORT OF FIELD SERVICE

INVOICE TO

SERVICED

7WTC
New York, N.Y.

CALL AUTHORIZED BY		CONTRACT #	FEE SERVICE #	FJ #	PO #	SEE AT JOB SITE
		SC00818				F.S.D.
PHONE	EXT.	DATE SCHEDULED	TIME SCHEDULED			SERVICEMAN ASSIGNED
		05-22-2001	P.M.			Frank L.

MATERIAL RECORD

QUANTITY ISSUED	QUANTITY B/O	FCI NO	DESCRIPTION	UNIT PRICE	PER	TOTAL AMOUNT

PREVENTIVE MAINTENANCE CONTRACT

CHECK APPROPRIATE BOX

- ☐ O.C
- ☐ I & T
- ☐ FEE CALL
- ☐ DELIVERY
- ☐ DEMO
- ☐ EMERGENCY CALL
- ☑ CONTRACT CALL
- ☐ PICK UP
- ☐ DEMO OWNER
- ☐ SURVEY

DEPARTED SHOP	TIME IN	TIME OUT	RETURNED SHOP	TOTAL HOURS	START MILEAGE	END MILEAGE	MISC EXPENSE	CAR FARE
	8:00 AM.	4:30 PM.						

- ☐ MAT REQD ☐ PARTIAL
- ☐ OTHER ☐ LABOR REQD

I & T COMPLETE ☐ CALL COMPLETE ☐

SERVICE DATE: 05-22-2001

WILL RETURN ON:

CUSTOMER SIGNATURE: Sean O'Keeffe

SERVICEMAN SIGNATURE: Frank L.

AUTHORIZATION FOR FIRE ALARM INTERRUPTION

The undersigned has been advised by Fire Service, Inc. representative that it may be necessary to interrupt the fire protection service by disconnecting the system and/or a components in the performance of their assigned work.

The undersigned hereby assumes the responsibility for the notification of the authorities at the time the interruption is initiated and will take all of the precautions deemed necessary during the period of interruption and hold harmless Fire Service Inc. and its employees regarding interruption of fire protection service during their service of the equipment.

Date

Name

PROBLEM—AS DESCRIBED

Service Contract

SERVICE PERFORMED

Assisting Firm Fire Dept. the Responding of the Service Contract.

WORK REMAINING

FCI 155
REV 6186

FIRE SERVICE INCORPORATED

97660

SUBSIDIARY OF FI...COM INC.

39-27 FIFTY NINTH STREET
WOODSIDE, NEW YORK 11377
(718) 899-2311

REPORT OF FIELD SERVICE

INVOICE TO

SERVICED
TWTC
West York, N.Y.

CALL AUTHORIZED BY	CONTRACT #	FEE SERVICE #	FJ #	PO #	SEE AT JOB SITE
	200818				F.S.D.

PHONE	EXT	DATE SCHEDULED	TIME SCHEDULED	SERVICEMAN ASSIGNED
		05-16-2001	AM.	Frank R.

MATERIAL RECORD

QUANTITY ISSUED	QUANTITY B/O	FCI NO	DESCRIPTION	UNIT PRICE	PER	TOTAL AMOUNT
			PREVENTIVE MAINTENANCE CONTRACT			

CHECK APPROPRIATE BOX

- ☐ Q.C
- ☐ I&T
- ☐ FEE CALL
- ☐ DELIVERY
- ☐ DEMO
- ☐ EMERGENCY CALL
- ☑ CONTRACT CALL
- ☐ PICK UP
- ☐ DEMO OWNER
- ☐ SURVEY

DEPARTED SHOP	TIME IN	TIME OUT	RETURNED SHOP	TOTAL HOURS	START MILEAGE	END MILEAGE	MISC EXPENSE	CAR FARE
	8:00 AM.	4:30 P.M.						

- ☐ MAT REQD ☐ PARTIAL
- ☐ OTHER ☐ LABOR REQD

I&T COMPLETE ☐ CALL COMPLETE ☐

SERVICE DATE: 05-16-2001
WILL RETURN ON:

CUSTOMER SIGNATURE: James Campbell
SERVICEMAN SIGNATURE: Frank R.

AUTHORIZATION FOR FIRE ALARM INTERRUPTION

The undersigned has been advised by Fire Service, Inc. representative that it may be necessary to interrupt the fire protection service by disconnecting the system and/or a component in the performance of their assigned work.

The undersigned hereby assumes the responsibility for the notification of the authorities at the time the interruption is initiated and will take all of the precautions deemed necessary during the period of interruption and hold harmless Fire Service Inc. and its employees regarding interruption of the protection service during their service of the equipment

Name

Date

PROBLEM—AS DESCRIBED

Service Contract

SERVICE PERFORMED

Assisting Fire Technician on the Performance of the Semi-Annual Inspection of the Smoke Detectors and Duct Detectors on the Premises

WORK REMAINING

FCI 155

FIRE SERVICE INCORPORATED

23484

Subsidiary of Firecom, Inc.
39-27 Fifty Ninth Street
Woodside, New York 11377
(718) 899-2311

REPORT OF FIELD SERVICE

LOCATIONS | **DEVICES**

INVOICE TO: 2 W.T.C. — N.Y.C. — J DARLINGTON F.D.

FLOOR	AREA			CABLE	XTNDR	S/D	TST/CLEAN
31	PASS/FREIGHT		(2)	2	008	BLK	DI3 ✓
	ELECT	A-B	(2)	2	187	BLK	✓
	TELEPH	A-B	(2)	2	187	BLK	✓
	COMM	A-B	(2)	2	187	BLK	✓
	ELECT	C-D	(2)	2	186	BLK	✓
	COAT/COMM	D		2	186	BLK	
	COAT/D.W.			2	186	BLK	
	ELECT	D.W.		2	186		
	ELECT	G/SEC.	(2)	3	009	PEC 3	✓
	ELECT	F		3	016	PEC 3	✓
	SHUTTLE ELEV			3	025	PEC 3	✓
	CORE MER.	AREA	(3)	2	244	PEC 37	✓
	CORE MER D	D	(2)	2	244	SIF 24	✓
	W. MER AREA		(2)	3	002	PEC 37	✓
	W. MER D/D		(2)	3	034	EDWDS	✓
	N. SUPPLY CLOSET		(2)	2	186	BLK	✓
30	PASS/FREIGHT		(2)	2	007	BLK	✓
	ELECT	A-B	(2)	2	184	BLK	✓
	COMM	A-B	(2)	2	184	BLK	✓
	TELEPH	A-B	(2)	2	184	BLK	✓
	ELECT	C-D	(2)	2	183	BLK	✓
	TELEPH	D/COAT		2	183	BLK	✓
	TELEPH	C		2	183	BLK	✓
	COMM	C		2	183	BLK	✓
	ELECT	D.W.		2	183	BLK	
	ELECT	F		3	015	PEC 3	✓
	ELECT	G/SEC	(2)	3	008	PEC 3	✓
	SHUTTLE	ELEV		3	024	PEC 3	✓
	CORE MER	AREA	(3)	2	242	PEC 37	✓
(1)	CORE MER D/D		(2)	2	243	SIF 24	✓
	W. MER	AREA	(2)	3	001	PEC 37	✓
	W. MER	D/D	(2)	3	033	EDWDS	✓

PREVENTIVE MAINTENANCE CONTRACT

SERVICEMAN ASSIGNED: Q. TORRES / F. ROSALES
SEE AT JOB SITE: F.S.I
DATE SCHEDULED: 5-16-01
CONTRACT #: 5C00818
TYPE OF SYSTEM: 2SN2000
FEE SERVICE #:
P.O. #:
CALL AUTHORIZED BY:
PHONE:
EXT:

☒ MAINTENANCE ☐ TEST
☐ JOB COMPLETE ☐ JOB INCOMPLETE
☐ SYSTEM ON LINE ☐ SYSTEM OFF LINE

DEPARTED SHOP	TIME IN	TIME OUT	RETURNED SHOP	TOTAL HOURS
AM PM	800 AM PM	430 AM PM	AM PM	

MATERIAL RECORD

QUANTITY	DESCRIPTION	COST

CUSTOMER NAME (PRINT): SILVERSTEIN
CUSTOMER SIGNATURE:
SERVICEMAN SIGNATURE:

AUTHORIZATION FOR FIRE ALARM INTERRUPTION
The undersigned has been advised by Fire Service Inc. representative that it may be necessary to interrupt the fire protection service by disconnecting the system and/or a component in the performance of their assigned work.
The undersigned hereby assumes the responsibility for the satisfaction of the instructions at the time the interruption is initiated and will take all of the precautions deemed necessary during this period of interruption and hold harmless Fire Service Inc. and its employees regarding interruption of the protection service during their service of the equipment.

NAME: DATE: TIME:

SERVICE PERFORMED & REMAINING: PREV. MAINTENANCE AS PER CONTRACT. — SMOKE DETECTORS (ABOVE LISTED) ON FLOORS 31 & 30 WERE TESTED & CLEANED. — CLASS E FIRE EQUIP - SYSTEM - PANELS / RELAYS / TECHNOLOGY - OUTPUTS FUNCTIONS AS FIRE SIGN / FLOOR PLANS / ABOVE / SIGNAL ON / CENTRAL OFFICE - CHECKS O.K. TO BE CONTINUED —

30TH (1) DUCT DET. CORE MER (#243) N/ACCESS - HIGH VOLTAGE "BUS BARS" ON WAY / OBSTACLE

(A) INACCESSIBLE (B) MISSING (C) DEFECTIVE (D) OTHER

FIRE SERVICE INCORPORATED

97659

SUBSIDIARY OF FI...COM INC.

39-27 FIFTY NINTH STREET
WOODSIDE, NEW YORK 11377
(718) 899-2311

REPORT OF FIELD SERVICE

INVOICE TO

SERVICED

TWTC
New York, N.Y.

CALL AUTHORIZED BY	CONTRACT #	FEE SERVICE #	FJ #	P O #	SEE AT JOB SITE
	Cc00818				F.S.D

PHONE	EXT	DATE SCHEDULED	TIME SCHEDULED	SERVICEMAN ASSIGNED
		05-15-2001		Frank L.

MATERIAL RECORD

QUANTITY ISSUED	QUANTITY B/O	F C I NO	DESCRIPTION	UNIT PRICE	PER	TOTAL AMOUNT

PREVENTIVE MAINTENANCE CONTRACT

CHECK APPROPRIATE BOX

- ☐ O.C
- ☐ I & T
- ☐ FEE CALL
- ☐ DELIVERY
- ☐ DEMO
- ☐ EMERGENCY CALL
- ☑ CONTRACT CALL
- ☐ PICK UP
- ☐ DEMO OWNER
- ☐ SURVEY

DEPARTED SHOP	TIME IN	TIME OUT	RETURNED SHOP	TOTAL HOURS	START MILEAGE	END MILEAGE	MISC EXPENSE	CAR FARE
	8:00 AM	4:30 PM						

- ☐ MAT REQD ☐ PARTIAL
- ☐ OTHER ☐ LABOR REQD

I & T COMPLETE ☐ CALL COMPLETE ☐

SERVICE DATE: 05-15-2001

WILL RETURN ON

CUSTOMER SIGNATURE: James Gangen

SERVICEMAN SIGNATURE: Frank L.

AUTHORIZATION FOR FIRE ALARM INTERRUPTION

The undersigned has been advised by Fire Service, Inc. representative that it may be necessary to interrupt the fire protection service by disconnecting the system and/or a component in the performance of their assigned work.

The undersigned hereby assumes the responsibility for the notification of the authorities at the time the interruption is initiated and will take all of the precautions deemed necessary during the period of interruption and hold harmless Fire Service Inc. and its employees regarding interruption of fire protection service during their service of the equipment.

Date

Name

PROBLEM—AS DESCRIBED

Service Contract

SERVICE PERFORMED

Assisting Jump Fire Tech.
on the Performing of the
Service Contract of Maintenance
on the Smoke Detectors and Heat
Detectors in the Premises

WORK REMAINING

FCI 155
REV 6186

FIRE SERVICE INCORPORATED

23483

Subsidiary of Firecom, Inc.
39-27 Fifty Ninth Street
Woodside, New York 11377
(718) 899-2311

REPORT OF FIELD SERVICE

LOCATIONS | **DEVICES**

FLOOR	Area			Circuit	Number	S/D	Alarm Test
32	PASS ELEV			2	009	BRK	✓
	ELECT	A		2	190	BRK	✓
	COMM	A		2	190	BRK	✓
	TELEPH	A		2	190	BRK	✓
	ELECT	B		2	190	BLK	✓
	COMM	B		2	190	BLK	✓
	TELEPH	B		2	190	BLK	✓
	FREIGHT	ELEV		2	009	BLK	✓
	ELECT	C		2	189	BRK	✓
	TELEPH	C/CONST		2	189	BLK	✓
	COMM	C/SUPV		2	189	BLK	✓
	ELECT	D		2	189	BLK	✓
	TELEPH	D SUPV		2	189	BLK	✓
	ELECT	D.W		2	189	BLK	✓
	ELECT	F		3	017	PEC3T	✓
	ELECT	G		3	010	PEC3T	✓
	SECURITY	DESK		3	010	PEC3T	✓
	SHUTTLE	ELEV.		3	026	PEC3	✓
	CORE	MER	AREA	2	248	PEC3T	✓
	CORE	MER	AREA	2	248	PEC3T	✓
	CORE	MER	AREA	2	248	PEC3T	✓
	CORE	MER	D/D	2	247	SIF24	✓
*	CORE	MER	D/D	2	247	SIF24	—
	WEST	MER	AREA	2	003	PEC3T	✓
	WEST	MER	AREA	2	003	PEC3T	✓
	WEST	MER	D/D	3	035	EDW3	✓
	WEST	MER	D/D	3	035	EDW3	✓
42	FREIGHT ELEV. S/O - BRK Unit & Base Required - BACK IN OPERATION						

PREVENTIVE MAINTENANCE CONTRACT

INVOICE TO: P.W.T.C
N.Y.C.
Mr. Corrigan

SERVICEMAN ASSIGNED: J. Torres / J. Parisi	SEE AT JOB SITE: F.S.I
	DATE SCHEDULED: 5-15-O
CONTRACT #: S/C00818	TYPE OF SYSTEM: LSN2000
FEE SERVICE #	PO #
CALL AUHTORIZED BY	PHONE / EXT

☒ MAINTENANCE ☒ TEST
☐ JOB COMPLETE ☐ JOB INCOMPLETE
☐ SYSTEM ON LINE ☐ SYSTEM OFF LINE

DEPARTED SHOP	TIME IN	TIME OUT	RETURNED SHOP	TOTAL HOURS
800 AM/PM	900 AM/PM	430 AM/PM	AM/PM	

MATERIAL RECORD

QUANTITY	DESCRIPTION	COST

AUTHORIZATION FOR FIRE ALARM INTERRUPTION
The undersigned has been advised by Fire Service Inc. representative that it may be necessary to interrupt the fire protection service by disconnecting the system and/or a component in the performance of their assigned work.
The undersigned hereby assumes the responsibility for the non-function of the malfunction at the time the interruption is initiated and will take all of the precautions deemed necessary during this period of interruption and hold harmless Fire Service Inc. and its employees regarding interruption of the protection service during their service of the equipment.

NAME _____ DATE _____ TIME _____

CUSTOMER NAME (PRINT) Silverstein
CUSTOMER SIGNATURE
SERVICEMAN SIGNATURE

SERVICE PERFORMED & REMAINING: PREVENTIVE MAINTENANCE AS PER CONTRACT / CHECK / TEST - CLEAN / SMOKE DETECTOR UNITS / CLASS E SYSTEM ON 32ND FL / ALL AREAS (AS LISTED) — (*) NOTE D/DETECTOR CORE MER UNIT N/S / TO Replace or Repaired. — A/SO A PER CONTRACT / REPAIRED (FREIGHT UNIT ON 42ND FL. — BASE DEFECTIVE / CONTACTS WIRING LOOSE / REPAIRED O.K. — BACK IN OPERATION. —

(A) INACCESSIBLE (B) MISSING (C) DEFECTIVE (D) OTHER

FIRE SERVICE INCORPORATED

97658

SUBSIDIARY OF F... COM INC.

39-27 FIFTY NINTH STREET
WOODSIDE, NEW YORK 11377
(718)899-2311

REPORT OF FIELD SERVICE

INVOICE TO

SERVICED

7WTC
New York, N.Y.

CALL AUTHORIZED BY		CONTRACT #	FEE SERVICE #	FJ #	P O #	SEE AT JOB SITE
		500818				F.S.D
PHONE	**EXT.**	**DATE SCHEDULED**	**TIME SCHEDULED**			**SERVICEMAN ASSIGNED**
		05-14-2001	A.M.			Frank L.

MATERIAL RECORD

QUANTITY ISSUED	QUANTITY B/O	F.C.I NO	DESCRIPTION	UNIT PRICE	PER	TOTAL AMOUNT

PREVENTIVE MAINTENANCE CONTRACT

CHECK APPROPRIATE BOX

- ☐ Q.C
- ☐ I & T
- ☐ FEE CALL
- ☐ DELIVERY
- ☐ DEMO
- ☐ EMERGENCY CALL
- ☑ CONTRACT CALL
- ☐ PICK UP
- ☐ DEMO OWNER
- ☐ SURVEY

DEPARTED SHOP	TIME IN	TIME OUT	RETURNED SHOP	TOTAL HOURS	START MILEAGE	END MILEAGE	MISC EXPENSE	CAR FARE
8:00 AM.	9:00 AM	3:30 PM.	4:00 PM.					

- ☐ MAT REQD
- ☐ PARTIAL
- ☐ OTHER
- ☐ LABOR REQD

I & T COMPLETE ☐ CALL COMPLETE ☐

SERVICE DATE: 05-14-2001

WILL RETURN ON:

CUSTOMER SIGNATURE: James Cunningham

SERVICEMAN SIGNATURE: Frank L.

AUTHORIZATION FOR FIRE ALARM INTERRUPTION

The undersigned has been advised by Fire Service, Inc. representative that it may be necessary to interrupt the fire protection service by disconnecting the system and/or a component in the performance of their assigned work.

The undersigned hereby assumes the responsibility for the notification of the authorities at the time the interruption is initiated and will take all of the precautions deemed necessary during the period of interruption and hold harmless Fire Service Inc. and its employees regarding interruption of the protection service during their service of the equipment.

Date

Name

PROBLEM—AS DESCRIBED

Service Contract

SERVICE PERFORMED

Assisting Jersey Fire Dept. In
Preparing of The Service Contract

WORK REMAINING

FCI 155
REV 6186

FIRE SERVICE INCORPORATED

23467

Subsidiary of Firecom, Inc.
39-27 Fifty Ninth Street
Woodside, New York 11377
(718) 899-2311

REPORT OF FIELD SERVICE

LOCATIONS	DEVICES
FLOOR	
47	STROBE PNL AFC 100 CHECK - Replaced KEYLOCK (300 TYPE)
46	" "
45	STROBE PNL AFC 100 CHECK Replaced (1) CEY LOCK (300 TYPE)
48	" "
13	REPAIR ON STROBE PNL AFC 101 PANEL. - ALSO CHECK STROBE PNL #2 AFC 100 by 13 FLOOR. -
24	FF. TAMPER S/W - Repair/Adj. ALARM STATUS. -
30	FF. TAMPER S/W - Adj/Repair ON ALARM STATUS. -

TROUBLE CALL

PREVENTIVE MAINTENANCE CONTRACT

INVOICE TO: TWTC

N.Y.C.

ATT: J. CALLAGHAN

SERVICEMAN ASSIGNED	SEE AT JOB SITE
J. TORRES	F.S.I.
F. ROSARIO	DATE SCHEDULED 5-14-01
CONTRACT # S/C 00818	TYPE OF SYSTEM LSN 2000
FEE SERVICE #	P.O. #
CALL AUHTORIZED BY	PHONE / EXT

☒ MAINTENANCE ☒ TEST

☐ JOB COMPLETE ☐ JOB INCOMPLETE

☐ SYSTEM ON LINE ☐ SYSTEM OFF LINE

DEPARTED SHOP	TIME IN	TIME OUT	RETURNED SHOP	TOTAL HOURS
800 AM/PM	900 AM/PM	3:30 PM	AM/PM	

MATERIAL RECORD

QUANTITY	DESCRIPTION	COST

CUSTOMER NAME (PRINT) SILVERSTEIN

CUSTOMER SIGNATURE

SERVICEMAN SIGNATURE

AUTHORIZATION FOR FIRE ALARM INTERRUPTION
The undersigned has been advised by Fire Service Inc. representative that it may be necessary to interrupt the fire protection service by disconnecting the system and/or a component in the performance of their assigned work.
The undersigned hereby assumes the responsibility for the notification of the authorities at the time the interruption is initiated and will take all of the precautions deemed necessary during the period of interruption and hold harmless Fire Service Inc. and its employees regarding interruption of fire protection service during their service of the equipment.

NAME DATE TIME

SERVICE PERFORMED & REMAINING S/CONTRACT. Repairs on above floors as per F.S.I. - STATUS Report. - on floors LISTED. -

(A) Also Assist Software Eng. Fireloy on 6th F. ARCADE System - FAN UNIT - STATUS -

(A) INACCESSIBLE (B) MISSING (C) DEFECTIVE (D) OTHER

FIRE SERVICE INCORPORATED

97657

SUBSIDIARY OF F... COM INC.

39-27 FIFTY NINTH STREET
WOODSIDE, NEW YORK 11377
(718) 899-2311

REPORT OF FIELD SERVICE

INVOICE TO

SERVICED

TWTC
Wood York, N.Y.

CALL AUTHORIZED BY		CONTRACT #	FEE SERVICE #	FJ #	P O #	SEE AT JOB SITE
		Sc00818				FSD
PHONE	EXT	DATE SCHEDULED	TIME SCHEDULED			SERVICEMAN ASSIGNED
		05-09-2001	P.M.			Frank L.

MATERIAL RECORD

QUANTITY ISSUED	QUANTITY B/O	F C I NO	DESCRIPTION	UNIT PRICE	PER	TOTAL AMOUNT

PREVENTIVE MAINTENANCE CONTRACT

AUTHORIZATION FOR FIRE ALARM INTERRUPTION

The undersigned has been advised by Fire Service, Inc. representative that it may be necessary to interrupt the fire protection service by disconnecting the system and/or a component in the performance of their assigned work.

The undersigned hereby assumes the responsibility for the notification of the authorities at the time the interruption is initiated and will take all of the precautions deemed necessary during the period of interruption and hold harmless Fire Service Inc. and its employees regarding interruption of the protection service during their service of the equipment.

Date

Name

CHECK APPROPRIATE BOX

- ☐ O. C
- ☐ I & T
- ☐ FEE CALL
- ☐ DELIVERY
- ☐ DEMO
- ☐ EMERGENCY CALL
- ☑ CONTRACT CALL
- ☐ PICK UP
- ☐ DEMO OWNER
- ☐ SURVEY

DEPARTED SHOP	TIME IN	TIME OUT	RETURNED SHOP	TOTAL HOURS	START MILEAGE	END MILEAGE	MISC EXPENSE	CAR FARE
	8:00 A.M.	4:30 P.M.						

- ☐ MAT REQD
- ☐ PARTIAL
- ☐ OTHER
- ☐ LABOR REQD

I & T COMPLETE ☐ CALL COMPLETE ☐

SERVICE DATE: 05-09-2001

WILL RETURN ON

CUSTOMER SIGNATURE

SERVICEMAN SIGNATURE: Frank L.

PROBLEM—AS DESCRIBED

Service Contract

SERVICE PERFORMED

Assisting Jimmy Testing the Service Contract
Left Client Advice of the Area
Smoke and Duct Detectors

WORK REMAINING

FCI 155
REV 6186

FIRE SERVICE INCORPORATED

23482

Subsidiary of Firecom, Inc.
39-27 Fifty Ninth Street
Woodside, New York 11377
(718) 899-2311

REPORT OF FIELD SERVICE

LOCATIONS | **DEVICES**

INVOICE TO: J.W.T.C. (SOLOMON BROTHERS N.Y.C.)

FLOOR	AREA'S			CABLE	VENDOR	S/D	TST CLEAN
34	PASS/FREIGHT			2	011	BLK	✓
	ELECT	A-B	(2)	2	194	BLK	✓
	COMM	A-B	(2)	2	194	BLK	✓
	TELEPH	A-B	(2)	2	194	BLK	✓
	ELECT	C-D	(2)	2	193	BLK	✓
	ELECT	D.W.		2	193	BLK	✓
	ELECT	F		4	048	PEC 3	✓
	ELEV TR	A.V. ROOM		4	048	PEC 3	✓
	ELECT	G/SEC.	(2)	4	072	PEC 3T	✓
	TELEPH	C-D	(2)	2	193	BLK	✓
	MEDICAL DPT	AREA		2	193	BLK	✓
	SHUTTLE ELEV.			4	000	PEC 3	✓
	CORE MER	AREA	(3)	2	252	PEC 3T	✓
	CORE MER D/DET.		(2)	2	251	EDWDS	✓
	W. MER	AREA.		4	024	PEC 3	✓
	W. MER	D/DET.		4	096	EDWDS	✓
33	ELECT	A-B	(2)	2	191	BLK	✓
	COMM	A-B	(2)	2	191	BLK	✓
	TELEPH	A-B	(2)	2	191	BLK	✓
	ELECT	COMM C	(2)	2	192	BLK	✓
	ELECT	D.W		2	192	BLK	✓
	ELECT	F		3	018	PEC 3	✓
	ELECT	G/SECURITY	(2)	3	011	PEC 3	✓
	TELEPH	SWITCH C		2	192	BLK	✓
	TELEPH	CONT D		2	192	BLK	✓
	FREIGHT/PASS		(2)	21	010	BLK	✓
	SHUTTLE ELEV			3	027	PEC 3	✓
	CORE MER	AREA	(3)	21	250	PEC 3T	✓
	CORE MER	D/D	(2)	2	249	SIE 24	✓
	W. MER	AREA	(2)	5	004	PEC 3T	✓
	W. MER	D/D	(2)	3	036	EDWDS	✓

PREVENTIVE MAINTENANCE CONTRACT

SERVICEMAN ASSIGNED: G. TORRES / J. ROSARIO

SEE AT JOB SITE: F.J.O

DATE SCHEDULED: 5-9-01

CONTRACT #: S/C00818

TYPE OF SYSTEM: US2000

FEE SERVICE #:

P.O. #:

CALL AUTHORIZED BY | PHONE | EXT

☑ MAINTENANCE ☐ TEST

☐ JOB COMPLETE ☐ JOB INCOMPLETE

☐ SYSTEM ON LINE ☐ SYSTEM OFF LINE

DEPARTED SHOP	TIME IN	TIME OUT	RETURNED SHOP	TOTAL HOURS
AM PM	800 AM PM	430 PM	AM PM	

MATERIAL RECORD

QUANTITY	DESCRIPTION	COST

CUSTOMER NAME (PRINT): SILVERSTEIN

CUSTOMER SIGNATURE:

SERVICEMAN SIGNATURE:

AUTHORIZATION FOR FIRE ALARM INTERRUPTION

The undersigned has been advised by Fire Service Inc. representative that it may be necessary to interrupt the fire protection service by disconnecting the system and/or a component in the performance of their assigned work.

The undersigned hereby assumes the responsibility for the notification of the authorities at the time the interruption is initiated and will take all of the precautions deemed necessary during the period of interruption and hold harmless Fire Service Inc. and its employees regarding interruption of the protection service during their service of the equipment.

NAME DATE TIME

SERVICE PERFORMED & REMAINING: S/CONTRACT / PREV. MAINTENANCE SMOKE DETECTORS ON FLOORS 34/33rd AS LISTED ABOVE. SYSTEM BACK/RESET/BACK TO OPERATION

(A) INACCESSIBLE (B) MISSING (C) DEFECTIVE (D) OTHER

FIRE SERVICE INCORPORATED

97656

SUBSIDIARY OF F.. _COM INC.

39-27 FIFTY NINTH STREET
WOODSIDE, NEW YORK 11377
(718) 899-2311

REPORT OF FIELD SERVICE

INVOICE TO

SERVICED

TWTA
New York, N.Y.

CALL AUTHORIZED BY		CONTRACT #	FEE SERVICE #	FJ #	P O #	SEE AT JOB SITE
		SC00818				F.S.D
PHONE	EXT	DATE SCHEDULED	TIME SCHEDULED			SERVICEMAN ASSIGNED
		05-08-2001	A.M.			Frank R.

MATERIAL RECORD

QUANTITY ISSUED	QUANTITY B/O	F C I NO	DESCRIPTION	UNIT PRICE	PER	TOTAL AMOUNT

PREVENTIVE MAINTENANCE CONTRACT

CHECK APPROPRIATE BOX

- ☐ Q.C
- ☐ I & T
- ☐ FEE CALL
- ☐ DELIVERY
- ☐ DEMO
- ☐ EMERGENCY CALL
- ☑ CONTRACT CALL
- ☐ PICK UP
- ☐ DEMO OWNER
- ☐ SURVEY

DEPARTED SHOP	TIME IN	TIME OUT	RETURNED SHOP	TOTAL HOURS	START MILEAGE	END MILEAGE	MISC EXPENSE	CAR FARE
	8:00 A.M.	4:30 P.M.						

- ☐ MAT REQD ☐ PARTIAL
- ☐ OTHER ☐ LABOR REQD

I & T COMPLETE ☐ CALL COMPLETE ☐

SERVICE DATE: 05-08-2001

WILL RETURN ON

CUSTOMER SIGNATURE: James Carlson

SERVICEMAN SIGNATURE: Frank R.

AUTHORIZATION FOR FIRE ALARM INTERRUPTION

The undersigned has been advised by Fire Service, Inc. representative that it may be necessary to interrupt the fire protection service by disconnecting the system and/or a component in the performance of the assigned work.

The undersigned hereby assumes the responsibility for the notification of the authorities at the time the interruption is initiated and will take all of the precautions deemed necessary during the period of interruption and hold harmless Fire Service Inc. and its employees regarding interruption of fire protection service during the service of the equipment.

Date

Name

PROBLEM—AS DESCRIBED

Service Contract

SERVICE PERFORMED

Activating Trip of Fire Dec the Inspection of the Sprinkler System Maintenance of the Area Smoke Detectors and Duct Detectors.

WORK REMAINING

FCI 155
REV 6186

FIRE SERVICE INCORPORATED

23481

Subsidiary of Firecom, Inc.
39-27 Fifty Ninth Street
Woodside, New York 11377
(718) 899-2311

REPORT OF FIELD SERVICE

LOCATIONS | **DEVICES**

FLOOR	AREA			CABLE	XTNDR	S/D	TST CHAN
35	ELEC	A		2	196	BLK	✓
	COMM	A		2	196	BLK	✓
	TELEM	A		2	196	BLK	✓
	ELEC	B		2	196	BLK	✓
	COMM	B		2	196	BLK	✓
	TELEM	B		2	196	BLK	✓
	PASS/FREIGHT		(2)	2	012	BLK	✓
	ELEC	G		4	073	PEC 3	✓
	SECURITY CABLET			4	073	PEC 3	✓
	ELEC	C		4	049	PEC 3	✓
	ELEC	D		4	049	PEC 3	✓
	ELEC	F		4	049	PEC 3	✓
	ELEC	F1		4	049	PEC 3	✓
	SHUTTLE ELEV			4	001	PEC 3	✓
	W. HER AREA			4	025	PEC 3	✓
	W. HER S/D			4	097	EQUIPS	✓
42	TTB	UNIT	CHECK'S TERMINAL				
39	TTB	UNIT	"	"			

INVOICE TO: W.T.C. (SILVERSTEIN PROPERTIES) N.Y.C.

SERVICEMAN ASSIGNED: J. TORRES / F. ROSARIO	SEE AT JOB SITE: F.S.I
	DATE SCHEDULED: 5-8-01
CONTRACT #: S/C 00 818	TYPE OF SYSTEM: LSN 2000
FEE SERVICE #	P.O. #
CALL AUHTORIZED BY	PHONE / EXT

☒ MAINTENANCE ☐ TEST
☐ JOB COMPLETE ☐ JOB INCOMPLETE
☐ SYSTEM ON LINE ☐ SYSTEM OFF LINE

DEPARTED SHOP	TIME IN	TIME OUT	RETURNED SHOP	TOTAL HOURS
AM PM	800 AM PM	430 AM PM	AM PM	

MATERIAL RECORD

QUANTITY	DESCRIPTION	COST
	PREVENTIVE MAINTENANCE CONTRACT	

CUSTOMER NAME (PRINT): SILVERSTEIN
CUSTOMER SIGNATURE:
SERVICEMAN SIGNATURE:

AUTHORIZATION FOR FIRE ALARM INTERRUPTION
The undersigned has been advised by Fire Service Inc. representative that it may be necessary to interrupt the fire protection service by disconnecting the system and/or a component as the performance of their assigned work.
The undersigned hereby assumes the responsibility for the notification of the authorities at the time the interruption is initiated and will take all of the precautions deemed necessary during this period of interruption and hold harmless Fire Service Inc. and its employee regarding interruption of fire protection service during their service of the equipment.

NAME DATE TIME

SERVICE PERFORMED & REMAINING: SERVICE PERFORMED / PARTS MAINTENANCE ON SMOKE DETECTION CHECK FIRE ALARM FLOOR 35TH (AS LISTED) ALL AREAS. — ALSO VISITED TECH ON 39/42ND FL. FOR CHECKS ON INPUTS TERMINALS FOR STOP/START FANS/HS DISPLAYS FLOORS 40/41/42/43. — SYSTEM LEFT BACK IN OPERATION

(A) INACCESSIBLE (B) MISSING (C) DEFECTIVE (D) OTHER

FIRE SERVICE INCORPORATED

84489

SUBSIDIARY OF F...C ..., INC.
39-27 FIFTY NINTH STREET
WOODSIDE, NEW YORK 11377
(718)899-2311

REPORT OF FIELD SERVICE

INVOICE TO

SERVICED
7 W T C New York
New York

CALL AUTHORIZED BY		CONTRACT #	FEE SERVICE #	FJ #	P O #	SEE AT JOB SITE
SHOP		U.P.S 818				F.S.I
PHONE	EXT	DATE SCHEDULED	TIME SCHEDULED			SERVICEMAN ASSIGNED
		5/4/01	AM			C. FORERO

MATERIAL RECORD

QUANTITY ISSUED	QUANTITY B/O	F C I NO	DESCRIPTION	UNIT PRICE	PER	TOTAL AMOUNT
			PREVENTIVE MAINTENANCE CONTRACT			

AUTHORIZATION FOR FIRE ALARM INTERRUPTION

The undersigned has been advised by Fire Service, Inc. representative that it may be necessary to interrupt the fire protection service by disconnecting the system and/or a component in the performance of their assigned work.

The undersigned hereby assumes the responsibility for the notification of the authorities at the time the interruption is initiated and will take all of the precautions deemed necessary during the period of interruption and hold harmless Fire Service Inc. and its employees regarding interruption of the protection service during their service of the equipment

Date

Name

CHECK APPROPRIATE BOX

- ☐ Q C
- ☐ I & T
- ☐ FEE CALL
- ☐ DELIVERY
- ☐ DEMO
- ☐ EMERGENCY CALL
- ☒ CONTRACT CALL
- ☐ PICK UP
- ☐ DEMO OWNER
- ☐ SURVEY

DEPARTED SHOP	TIME IN	TIME OUT	RETURNED SHOP	TOTAL HOURS	START MILEAGE	END MILEAGE	MISC EXPENSE	CAR FARE
800	900	200						
AM	AM	PM						

☐ MAT RECD ☐ PARTIAL
☐ OTHER ☐ LABOR RECD

I & T COMPLETE ☐ CALL COMPLETE ☐

SERVICE DATE 5-4-01

WILL RETURN ON

CUSTOMER SIGNATURE

SERVICEMAN SIGNATURE C. FORERO CHECK JOB

PROBLEM—AS DESCRIBED PREVENTIVE MAINTENANCE / U.P.S SERVICE CONTRACT

SERVICE PERFORMED Arrived At Building, Checked U.P.S System, And Battery Racks (80 Batteries) Took Readings

TOTAL - BATTERY VOLTAGE = 139.8 VOLTS-A/DC

BATTERY AMP = .3 AMPS

L-1 = 11.3

L-2 = 10.9

INPUT - VOLTAGE = 208. A/C

246. A/C

WORK REMAINING Cleaned And Checked U.P.S And Battery Racks, System OK

FIRE SERVICE INCORPORATED

97655

SUBSIDIARY OF F...E... INC
39-27 FIFTY NINTH STREET
WOODSIDE, NEW YORK 11377
(718) 899-2311

REPORT OF FIELD SERVICE

INVOICE TO

SERVICED
7WTC
NYC

CALL AUTHORIZED BY		CONTRACT #	FEE SERVICE #	FJ #	P O #	SEE AT JOB SITE
		Sc00518				F.S.D.
PHONE	EXT.	DATE SCHEDULED	TIME SCHEDULED			SERVICEMAN ASSIGNED
		5/2/2001	A.M.			Frank L.

MATERIAL RECORD

QUANTITY ISSUED	QUANTITY B/O	F C I NO	DESCRIPTION	UNIT PRICE	PER	TOTAL AMOUNT

PREVENTIVE MAINTENANCE CONTRACT

CHECK APPROPRIATE BOX

- ☐ Q. C
- ☐ I & T
- ☐ FEE CALL
- ☐ DELIVERY
- ☐ DEMO
- ☐ EMERGENCY CALL
- ☑ CONTRACT CALL
- ☐ PICK UP
- ☐ DEMO OWNER
- ☐ SURVEY

DEPARTED SHOP	TIME IN	TIME OUT	RETURNED SHOP	TOTAL HOURS	START MILEAGE	END MILEAGE	MISC EXPENSE	CAR FARE
	8:00 A.M.	4:30 P.M.						

- ☐ MAT REQD
- ☐ PARTIAL
- ☐ OTHER
- ☐ LABOR REQD

I & T COMPLETE ☐ CALL COMPLETE ☐

SERVICE DATE: 5/2/2001
WILL RETURN ON:

CUSTOMER SIGNATURE
SERVICEMAN SIGNATURE
Frank L.

AUTHORIZATION FOR FIRE ALARM INTERRUPTION

The undersigned has been advised by Fire Service, Inc. representative that it may be necessary to interrupt the fire protection service by disconnecting the system and/or a component in the performance of their assigned work.

The undersigned hereby assumes the responsibility for the notification of the authorities at the time the interruption is initiated and will take all of the precautions deemed necessary during the period of interruption and hold harmless Fire Service Inc. and its employees regarding interruption of fire protection service during their service of the equipment

Date

Name

PROBLEM—AS DESCRIBED

Service Contract

SERVICE PERFORMED

Activating Lock. Inspected
the Performing OK
Service Completed.

WORK REMAINING

FCI 155
REV 6186

FIRE SERVICE INCORPORATED

23479

Subsidiary of Firecom, Inc.
39-27 Fifty Ninth Street
Woodside, New York 11377
(718) 899-2311

REPORT OF FIELD SERVICE

LOCATIONS | **DEVICES**

FLOOR	ALL-S			CABLE	XTNM	S/D	T.ST CLEAN
37	PASS/FREIGHT	(2)		2	014	BLK	✓
	SHUTTLE	PASS ELEV.		4	003	PEC 3	✓
	ELECT	A-B	(3)	2	200	BRK	✓
	COMM.	A-B	(3)	2	200	BRK	✓
	TELEPH	A-B	(3)	2	200	BRK	✓
	ELECT	C-D	(2)	2	199	BRK	✓
	ELECT	D.W		2	199	BRK	✓
	ELECT	'F'	EAST	4	051	PEC 3	✓
	ELECT	G/SEE	(2)	4	075	PEC 3	✓
	TELEPH	C-D	(2)	2	199	BLK	✓
	COMM	C		2	199	BLK	✓
	CORE	HER	AREA (3)	2/002	258	PEC3T	✓
	CORE	HER	D/D (2)	2/001	257	HochKi	✓
	W. HER	AREA	(2)	4	027	PEC3T	✓
	W HER	D/D	(2)	4	099	ENWI	✓
36	ELECT	A-B	(2)	2	198	BLK	✓
	COMM	A-B	(2)	2	198	BLK	✓
	TELEPH	A-B	(2)	2	198	BLK	✓
	ELECT	'F'	EAST	4	050	PEC 3	✓
	ELECT	D.W		2	197	BLK	✓
	ELECT	G/SEE	(2)	4	074	PEC 3	✓
	ELECT	C-D	(2)	2	197	BLK	✓
	TELEPH	CONT C-D	(2)	2	197	BRK	✓
	COMM	LOUNGE	R	2	197	BLK	✓
	PASS	FREIGHT	ELEV. (2)	2	013	BRK	✓
	SHUTTLE	ELEV.	PASS	4	002	PEC 3	✓
WEST	CORE	HER	D/D	4	098	CHWS	✓
WEST	CORE	HER	D/D	4	098	ENWI	✓
WEST	CORE	HER	AREA (3)	4	026	PEC3T	✓
	CORE	HER	D/D	2	255	SIF24	✓
	CORE	HER	D/D	2	255	SIF24	✓
	CORE	HER	AREA (3)	2	000	PEC3T	✓

INVOICE TO:
7 W.T.C.
SOLOMON BROTHERS / SALIM
N.Y.C.

SERVICEMAN ASSIGNED: J. TORRES	SEE AT JOB SITE: F.S.I
	DATE SCHEDULED: 5-2-01
CONTRACT #: S/C00 8/8	TYPE OF SYSTEM: CSN 2000
FEE SERVICE #	P.O #
CALL AUHTORIZED BY	PHONE / EXT

☐ MAINTENANCE ☑ TEST
☐ JOB COMPLETE ☐ JOB INCOMPLETE
☐ SYSTEM ON LINE ☐ SYSTEM OFF LINE

DEPARTED SHOP	TIME IN	TIME OUT	RETURNED SHOP	TOTAL HOURS
AM PM	800 AM PM	420 AM PM	AM PM	

MATERIAL RECORD

QUANTITY	DESCRIPTION	COST
	PREVENTIVE MAINTENANCE CONTRACT	

CUSTOMER NAME (PRINT): SILVERSTEIN
CUSTOMER SIGNATURE: [signature]
SERVICEMAN SIGNATURE: [signature]

AUTHORIZATION FOR FIRE ALARM INTERRUPTION
The undersigned has been advised by Fire Service Inc. representative that it may be necessary to interrupt the fire protection service by disconnecting the system and/or a components in the performance of their assigned work.
The undersigned hereby assumes the responsibility for the notification of the authorities at the time the interruption is initiated and will take all of the precautions deemed necessary during this period of interruption and hold harmless Fire Service Inc. and its employees regarding interruption of fire protection service during their service of the equipment.

NAME _____ DATE _____ TIME _____

X

SERVICE PERFORMED & REMAINING: S/CONTRACT - PREV MAINTENANCE ON FLOORS 37/36 SOLOMON SALIM BROTHERS) QUAD AREA / ELEVATORS / ELEC. SHUTTLE / HIGH RISE - SMOKE DETECTORS WITH EX LISTED HORNS — SYSTEM RESET / ANNUNCIATION AT F.E.S. — BACK IN OPERATION —

(A) INACCESSIBLE (B) MISSING (C) DEFECTIVE (D) OTHER

FIRE SERVICE INCORPORATED

97654

SUBSIDIARY OF FireCom INC.

39-27 FIFTY NINTH STREET
WOODSIDE, NEW YORK 11377
(718) 899-2311

REPORT OF FIELD SERVICE

INVOICE TO

SERVICED

7 WTC
NYC

CALL AUTHORIZED BY	CONTRACT #	FEE SERVICE #	FJ #	P O #	SEE AT JOB SITE
	Sc00818				F.S.D

PHONE	EXT	DATE SCHEDULED	TIME SCHEDULED	SERVICEMAN ASSIGNED
		5/1/2001	P.M.	Frank L.

MATERIAL RECORD

QUANTITY ISSUED	QUANTITY B/O	FCI NO	DESCRIPTION	UNIT PRICE	PER	TOTAL AMOUNT
					PREVENTIVE MAINTENANCE CONTRACT	

CHECK APPROPRIATE BOX

- ☐ Q.C
- ☐ I & T
- ☐ FEE CALL
- ☐ DELIVERY
- ☐ DEMO
- ☐ EMERGENCY CALL
- ☑ CONTRACT CALL
- ☐ PICK UP
- ☐ DEMO OWNER
- ☐ SURVEY

DEPARTED SHOP	TIME IN	TIME OUT	RETURNED SHOP	TOTAL HOURS	START MILEAGE	END MILEAGE	MISC EXPENSE	CAR FARE
	8:00 A.M.	4:30 P.M.						

- ☐ MAT REQD
- ☐ PARTIAL
- ☐ OTHER
- ☐ LABOR REQD

SERVICE DATE: 5/1/2001

CUSTOMER SIGNATURE: James Coughlin

I & T COMPLETE ☐ CALL COMPLETE ☐

WILL RETURN ON

SERVICEMAN SIGNATURE: Frank L.

AUTHORIZATION FOR FIRE ALARM INTERRUPTION

The undersigned has been advised by Fire Service, Inc. representative that it may be necessary to interrupt the fire protection service by disconnecting the system and/or a component in the performance of their assigned work.

The undersigned hereby assumes the responsibility for the notification of the authorities at the time the interruption is initiated and will take all of the precautions deemed necessary during the period of interruption and hold harmless Fire Service Inc. and its employees regarding interruption of fire protection service during their service of the equipment.

Date

Name

PROBLEM—AS DESCRIBED

Service Contract

SERVICE PERFORMED

Assisting Lock & Security Service
See the Services OK the Service
Contract.

WORK REMAINING

FCI 155
REV 8186

FIRE SERVICE INCORPORATED

23478

Subsidiary of Firecom, Inc.
39-27 Fifty Ninth Street
Woodside, New York 11377
(718) 899-2311

REPORT OF FIELD SERVICE

LOCATIONS | **DEVICES**

FLOOR	AREAS			CABLE	XMTR#	S/D	T/C/FAN
40	ELECT	A		2	207	BLK	✓
	COMM	A		2	207	BLK	✓
	TELEPH	A		2	207	BLK	✓
	ELECT	B		2	207	BLK	✓
	COMM	B		2	207	BLK	✓
	TELEPH	B		2	207	BLK	✓
	PASS / FREIGHT	ELEV (2)		21	017	BLK	✓
	ELECT	C		2	208	BLK	✓
	COMM / COMM	C		2	208	Apollo	✓
	TELE / STORAGE	C		2	208	Apollo	✓
	ELECT	D		2	208	BLK	✓
	TELE / STORAGE	D		2	208	Apollo	✓
	COMM / STORAGE	D		2	208	Apollo	✓
	CORE	MED D/D		2	015	Apollo	✓
	CORE	MED D/D		2	015	Apollo	✓
	CORE	AREA CEILING		2	208	Apollo	✓
	CORE	AREA CEILING		2	208	Apollo	✓
(*)	ELECT	'F'	MISSING / NO S/D	ELEVATOR			—
	SECURITY	CLOSET		4	078	PEC3	✓
	ELECT	'G'		4	078	PEC3	✓
	FILE	RM		2	208	Apollo	✓
	FILE	RM		2	208	Apollo	✓
LOBBY	F.C. STATION	REPAIR DCM 40 / DISPLAY #16					
	PURGE / PRESS	FLOORS.					
18	FTB	REPAIRS ON 795 MOTHER BOARD.					
	REPLACE (2) 792 P.C.I BOARDS - (DEFECTIVE)						
	FOR REPAIRS ON PURGE / PRESSURIZATION ON						
	18TH FL.	—					

INVOICE TO:
JWT.C
(Solomon Smith Barney)
N.Y.C.

SERVICEMAN ASSIGNED	SEE AT JOB SITE
J. Tolley	F.S.I
	DATE SCHEDULED: 5-1-01
CONTRACT # 5/C00818	TYPE OF SYSTEM: LSN2000
FEE SERVICE #	P.O. #
CALL AUHTORIZED BY	PHONE / EXT

☒ MAINTENANCE ☒ TEST
☐ JOB COMPLETE ☐ JOB INCOMPLETE
☐ SYSTEM ON LINE ☐ SYSTEM OFF LINE

DEPARTED SHOP	TIME IN	TIME OUT	RETURNED SHOP	TOTAL HOURS
AM PM	800 AM PM	430 AM PM	AM PM	

MATERIAL RECORD

QUANTITY	DESCRIPTION	COST
21	792 P.C. BOARDS.	
	PREVENTIVE MAINTENANCE CONTRACT	

CUSTOMER NAME (PRINT): SILVERSTEIN
CUSTOMER SIGNATURE
SERVICEMAN SIGNATURE

AUTHORIZATION FOR FIRE ALARM INTERRUPTION
The undersigned has been advised by Fire Service Inc. representative that it may be necessary to interrupt the fire protection service by disconnecting the system and/or a component in the performance of their assigned work.
The undersigned hereby assumes the responsibility for the notification of the authorities at the time the interruption is initiated and will take all of the precautions deemed necessary during the period of interruption and hold harmless Fire Service Inc. and its employees regarding interruption of fire protection service during their service of the equipment.

TIME
DATE
NAME

SERVICE PERFORMED & REMAINING: SCHEDULED - PREVENTIVE MAINTENANCE SMOKE DETECTORS ON 40TH FL (SOLOMON) ALL ELEC (INCL ELEV'S) / CLEAN DOBBIES / STORAGE & MACHINE RM'S / CORE MED'S AS LISTED. —
(*) NOTE: 'F' ELECT / ELEV S/D NOT EXISTING - MISSING. —
(*) ALSO PERFORMED REPAIR / REPLACING BOARDS ON 18TH FTB / PURGE / PRESS. FANS / ETC.

(A) INACCESSIBLE (B) MISSING (C) DEFECTIVE (D) OTHER

FIRE SERVICE INCORPORATED

: 23480

Subsidiary of Firecom, Inc.
39-27 Fifty Ninth Street
Woodside, New York 11377
(718) 899-2311

REPORT OF FIELD SERVICE

LOCATIONS			DEVICES			
FLOOR	AREA		CABLE	KIND	B/D	TST CLEAN
41	ELECT	A	2	209	BLK	✓
	COMM	A	2	209	BLK	✓
	TELEM	A	2	209	BLK	✓
	COMM	B	2	209	BLK	✓
	ELECT	B	2	209	BLK	✓
	TELEM	B	2	209	BLK	✓
	PASS	ELEV.	2	018	BLK	✓
	FREIGHT	ELEV	2	018	BLK	✓
	COMM/COAT	C	2	195	Apllo	✓
	ELECT	C	2	195	Apllo	✓
	TELEM	C	2	195	Apllo	✓
	CORE	HER D/D	2	016	Apllo	✓
	CORE	HER D/D	2	016	Apllo	✓
	CORE	AREA LEFT.	2	019	Apllo	✓
	CORE	AREA HER.	2	019	Apllo	✓
	ELECT	G	4	079	PEC3T	✓
	SECURITY	CLOSET	4	079	PEC3T	✓
	SHUTTLE	ELEV.	4	007	PEC3	✓
46	STROBE PANEL AFL 100 / 4 CKT ODR - STROBE					
	(2) BATTERIES 12VDC REPLACED.					
39	STROBE PNL AFL 100 / (2) BATTERIES 12VDC					
	REPLACED - PNL UPDATE MODIF -					
18	PURGE / PRESS. FANS / ELEVATOR					
	TROUBLESHOOTING / REPAIRS -					
	PREVENTIVE MAINTENANCE CONTRACT					

INVOICE TO: J.W.T.C.
Solomon Joint Board
N.Y.C.

SERVICEMAN ASSIGNED: J. Tower / F. Rosario	SEE AT JOB SITE: F.I.I.
	DATE SCHEDULED: 4-30-01
CONTRACT #: 5/C00818	TYPE OF SYSTEM: LSN 2000
FEE SERVICE #	P.O. #
CALL AUHTORIZED BY	PHONE / EXT

☒ MAINTENANCE ☒ TEST
☐ JOB COMPLETE ☐ JOB INCOMPLETE
☐ SYSTEM ON LINE ☐ SYSTEM OFF LINE

DEPARTED SHOP	TIME IN	TIME OUT	RETURNED SHOP	TOTAL HOURS
800 AM/PM	900 AM/PM	5:30 PM	AM/PM	

MATERIAL RECORD

QUANTITY	DESCRIPTION	COST
2	792 P.C. Boards	385
4		

CUSTOMER NAME (PRINT): SILVERSTEIN
CUSTOMER SIGNATURE
SERVICEMAN SIGNATURE

AUTHORIZATION FOR FIRE ALARM INTERRUPTION
The undersigned has been advised by Fire Service Inc. representatives that it may be necessary to interrupt the fire protection service by disconnecting the system and/or a component in the performance of field assigned work.
The undersigned hereby assumes the responsibility for the notification of the authorities at the time the interruption is initiated and will take all of the precautions deemed necessary during this period of interruption and hold harmless Fire Service Inc. and its employees regarding interruption of the protection service during their service of the equipment.

TIME / DATE / NAME

SERVICE PERFORMED & REMAINING: PREV. MAINTENANCE AS PER CONTRACT ON 4TH FLOOR SMOKE DETECTION AREAS / EFECT LOBBIES AS (LISTED) ABOVE. - (ALL) REPAIRS ON DEFECTIVE OR MALFUNCTION ON STROBES PANEL 4TH FL & 39TH FL - REPLACED DEFECTIVE BATTERIES LOW OUTPUT VOLTAGE - (4) UNITS 12VDC. ALSO TROUBLE SHOOTED / REPAIRED PROBLEM WITH 18TH PURGE / PRESSURIZATION FAN UNIT - (2) 792 P.C. REPLACED - NEED TO REPAIR 795 BOARD PANEL TIB / DATA MONITOR S/W. - SYSTEM OK / RETURNED BACK TO OPERATION

(A) INACCESSIBLE (B) MISSING (C) DEFECTIVE (D) OTHER

FIRE SERVICE INCORPORATED

97653

SUBSIDIARY OF FIRECOM INC.
39-27 FIFTY NINTH STREET
WOODSIDE, NEW YORK 11377
(718) 899-2311

REPORT OF FIELD SERVICE

INVOICE TO

SERVICED
7WTC
NYC

CALL AUTHORIZED BY		CONTRACT #	FEE SERVICE #	FJ #	PO #	SEE AT JOB SITE
		SC00818				F.S.D
PHONE	EXT	DATE SCHEDULED	TIME SCHEDULED			SERVICEMAN ASSIGNED
		4/30/2001	A.M.			Frank L.

MATERIAL RECORD

QUANTITY ISSUED	QUANTITY B/O	FCI NO	DESCRIPTION	UNIT PRICE	PER	TOTAL AMOUNT

PREVENTIVE MAINTENANCE CONTRACT

CHECK APPROPRIATE BOX

- ☐ Q.C
- ☐ I & T
- ☐ FEE CALL
- ☐ DELIVERY
- ☐ DEMO
- ☐ EMERGENCY CALL
- ☑ CONTRACT CALL
- ☐ PICK UP
- ☐ DEMO OWNER
- ☐ SURVEY

DEPARTED SHOP	TIME IN	TIME OUT	RETURNED SHOP	TOTAL HOURS	START MILEAGE	END MILEAGE	MISC EXPENSE	CAR FARE
8:00 AM	9:00 AM.	4:30 PM.						

☐ MAT REQD ☐ PARTIAL ☐ OTHER ☐ LABOR REQD

I & T COMPLETE ☐ CALL COMPLETE ☐

SERVICE DATE 4/30/2001

WILL RETURN ON

CUSTOMER SIGNATURE

SERVICEMAN SIGNATURE Frank L.

AUTHORIZATION FOR FIRE ALARM INTERRUPTION

The undersigned has been advised by Fire Service, Inc. representative that it may be necessary to interrupt the fire protection service by disconnecting the system and/or a component in the performance of their assigned work.

The undersigned hereby assumes the responsibility for the notification of the authorities at the time the interruption is initiated and will take all of the precautions deemed necessary during the period of interruption and hold harmless Fire Service Inc. and its employees regarding interruption of fire protection service during their service of the equipment

Date

Name

PROBLEM—AS DESCRIBED Service Contract

SERVICE PERFORMED

Reporting Tech. Jimmy Tosse
Per the Testing of the Service
Control Panel

WORK REMAINING

FCI 155
REV 6186

FIRE SERVICE INCORPORATED

23473

Subsidiary of Firecom, Inc.
39-27 Fifty Ninth Street
Woodside, New York 11377
(718) 899-2311

REPORT OF FIELD SERVICE

LOCATIONS | **DEVICES**

FLOOR	AREA			CABLE	XTNSN	S/D	TST CLEAN
37	E.H.R. AREA (x2)			1	201	BLK	✓
	CARD'S 16-20						
31	E.H.R. AREA			1	188	BLK	✓
	CARD'S 13-14-15 (x2)						
31	E.H.R	DUCT DET		2	246	SIF24	✓
		E.C.R					
31	E.H.R	AREA		1	188	BLK	✓
	E.H.R	DUCT DET. E.C.R		2	246	SIF24	✓
	CARD'S 11+12						
30	E.H.R	AREA (x2)		1	185	BLK	✓
	CARDS 13-14-15						
30	EHR	AREA		1	185	BLK	✓
	CARDS 11+12						
16	E.H.R	AREA	EAST	1	195	BLK	✓
16	EHR	AREA	EAST	1	195	BLK	✓
16	E.H.R	D/D	EAST	1	254	EQUIS	✓
16	EHR	AREA	WEST	1	195	BLK	✓
16	EHR	DUCT	DET. WEST	1	254	EQUIP	✓
15	E.H.R	AREA	EAST	1	192	BLK	✓
15	EH.R	AREA	EAST	1	192	BAK	✓
15	E.H.R	AREA	WEST	1	192	BLK	✓
3RD	SHUTTLE	ELEV	SHAFT	3	049	PEC3	✓
2ND	EHR	H.E.	3+2	3	005	PEC3T	✓
23	EHR	AREA (x2)		1	170	BLK	✓
	EHR	D/D		2	229	SIF24	✓

INVOICE TO:
W.T.C
SIVERSTEIN PROP.
N.Y.C

SERVICEMAN ASSIGNED	SEE AT JOB SITE
J. TORRES	F.S.I.
F. ROMAN	DATE SCHEDULED 4-28-01
CONTRACT # S/C 00818	TYPE OF SYSTEM CSN 2000
FEE SERVICE #	P.O. #
CALL AUHTORIZED BY	PHONE / EXT

☑ MAINTENANCE ☐ TEST
☐ JOB COMPLETE ☐ JOB INCOMPLETE
☐ SYSTEM ON LINE ☐ SYSTEM OFF LINE

DEPARTED SHOP	TIME IN	TIME OUT	RETURNED SHOP	TOTAL HOURS
AM PM	7:00 AM PM	4:00 AM PM	AM PM	

MATERIAL RECORD

QUANTITY	DESCRIPTION	COST
	PREVENTIVE MAINTENANCE CONTRACT	

CUSTOMER NAME (PRINT)
CUSTOMER SIGNATURE
SERVICEMAN SIGNATURE

AUTHORIZATION FOR FIRE ALARM INTERRUPTION
The undersigned has been advised by Fire Service Inc. representative that it may be necessary to interrupt the fire protection service by disconnecting the system and/or a component in the performance of their assigned work.
The undersigned hereby assumes the responsibility for the notification of the authorities at the time the interruption is initiated and will take all of the precautions deemed necessary during the period of interruption and hold harmless Fire Service Inc. and its employees regarding interruption of fire protection service during their service of the equipment.

NAME DATE TIME

SERVICE PERFORMED & REMAINING

S/Controls - Prov. Testing Select
Detectors: Shafts - Cx Listed - Assisted By Otis Mech
Elev Hoist Key's Shafts - Also Lynn (1) D/D in E.H.R. 31st Fl
Reviewed Also at Base Unit - Back to Operation

(A) INACCESSIBLE (B) MISSING (C) DEFECTIVE (D) OTHER

FIRE SERVICE INCORPORATED

94445

SUBSIDIARY OF FIRECOM INC.

39-27 FIFTY NINTH STREET
WOODSIDE, NEW YORK 11377
(718) 899-2311

REPORT OF FIELD SERVICE

INVOICE TO

SERVICED

7 WTC
New York, N.Y.

CALL AUTHORIZED BY		CONTRACT #	FEE SERVICE #	FJ #	P.O. #	SEE AT JOB SITE
		S000818				F.S.I.
PHONE	**EXT**	**DATE SCHEDULED**	**TIME SCHEDULED**			**SERVICEMAN ASSIGNED**
		04-28-2001	A.M.			FRANK L.

MATERIAL RECORD

QUANTITY ISSUED	QUANTITY B/O	F.C.I. NO	DESCRIPTION	UNIT PRICE	PER	TOTAL AMOUNT
					PREVENTIVE MAINTENANCE CONTRACT	

CHECK APPROPRIATE BOX

- ☐ Q.C
- ☐ I & T
- ☐ FEE CALL
- ☐ DELIVERY
- ☐ DEMO
- ☐ EMERGENCY CALL
- ☑ CONTRACT CALL
- ☐ PICK UP
- ☐ DEMO OWNER
- ☐ SURVEY

DEPARTED SHOP	TIME IN	TIME OUT	RETURNED SHOP	TOTAL HOURS	START MILEAGE	END MILEAGE	MISC EXPENSE	CAR FARE
	7:00 A.M.	3:00 P.M.						

☐ MAT RECD ☐ PARTIAL
☐ OTHER ☐ LABOR RECD

I & T COMPLETE ☐ CALL COMPLETE ☐

SERVICE DATE: 04-28-2001

WILL RETURN ON:

CUSTOMER SIGNATURE: [signature]

SERVICEMAN SIGNATURE: [signature]

PROBLEM—AS DESCRIBED: Service Contract

SERVICE PERFORMED

Assisting Technician During Service Visit
Performing of the Service Contract of
Testing and Cleaning of the Smoke
and Heat Detectors Inside of E.M.P.
and Safety elevators. See Service Report
#23477

WORK REMAINING

AUTHORIZATION FOR FIRE ALARM INTERRUPTION

The undersigned has been advised by Fire Service, Inc. representative that it may be necessary to interrupt the fire protection service by disconnecting the system and/or a component in the performance of their assigned work.

The undersigned hereby assumes the responsibility for the notification of the authorities at the time the interruption is initiated and will take all of the precautions deemed necessary during the period of interruption and hold harmless Fire Service Inc. and its employees regarding interruption of the protection service during the service of the equipment.

Date

Name

FCI 155
REV 6186

FIRE SERVICE INCORPORATED

97652

SUBSIDIARY OF FIRECOM INC.

39-27 FIFTY NINTH STREET
WOODSIDE, NEW YORK 11377
(718) 899-2311

REPORT OF FIELD SERVICE

INVOICE TO

SERVICED

W.T.C. -
Silverstein Prop. -
N-Y-C

CALL AUTHORIZED BY		CONTRACT #	FEE SERVICE #	F.J #	P.O #	SEE AT JOB SITE
ST.		S/C 00 818				F.J.-1
PHONE	EXT.	DATE SCHEDULED	TIME SCHEDULED			SERVICEMAN ASSIGNED
		4-25-01	Any			G. Torres

MATERIAL RECORD

QUANTITY ISSUED	QUANTITY B/O	F.C.I NO	DESCRIPTION	UNIT PRICE	PER	TOTAL AMOUNT
2			BATTERIES 12 VOLT (STROBE PNL)	6.95		

PREVENTIVE MAINTENANCE CONTRACT

AUTHORIZATION FOR FIRE ALARM INTERRUPTION

The undersigned has been advised by Fire Service, Inc. representative that it may be necessary to interrupt the fire protection service by disconnecting the system and/or a component in the performance of their assigned work.

The undersigned hereby assumes the responsibility for the notification of the authorities at the time the interruption is initiated and will take all of the precautions deemed necessary during the period of interruption and hold harmless Fire Service Inc. and its employees regarding interruption of the protection service during their service of the equipment.

Date

Name

CHECK APPROPRIATE BOX

- ☐ O.C
- ☐ I & T
- ☐ FEE CALL
- ☐ DELIVERY
- ☐ DEMO
- ☐ EMERGENCY CALL
- ☑ CONTRACT CALL
- ☐ PICK UP
- ☐ DEMO OWNER
- ☐ SURVEY

DEPARTED SHOP	TIME IN	TIME OUT	RETURNED SHOP	TOTAL HOURS	START MILEAGE	END MILEAGE	MISC EXPENSE	CAR FARE
	8:00	4:30						
	Any	Any						

- ☐ MAT RFOD ☐ PARTIAL
- ☐ OTHER ☐ LABOR RECD

SERVICE DATE: 4-25-01

CUSTOMER SIGNATURE

I & T COMPLETE ☐ CALL COMPLETE ☐

WILL RETURN ON

SERVICEMAN SIGNATURE

PROBLEM—AS DESCRIBED: SERVICE CONTRACT / REPAIRS STROBE PANEL'S - VARIOUS Floor'S Also to check PURGE FAN 18" RP. N/G - AS PER F.J.-1). -

SERVICE PERFORMED: PERFORMED Repairs on Strobes Panel's - Trouble's / Troubleshooting Replaced (6) SET'S OF 12 VOLTS BATTERIES ON FLOORS 7th - 8th - 39th FLOORS And Traced / Troubleshooting panel on 46th FP. STROBE PNL. - Circuit #2 Lifty Amps To High Resistance - / Trouble Condition. - Circuit Hose Activities / Trouble Unit Restored Panel Back on Line. - Also Check / Troubleshooting 18" RP. Purge Unit Not 'Locking' on Alarm Condition At F.C. Station Display / As well Pressurization 17th & 19th RP. - Further Checked Leads To Also Malfunction on Purging 17th & 19th Floor's. - Check. TB's on 18th FP. Inputs O.K. / P.C.I 792 Keyboard / Problem Persisting / F.C. Station

WORK REMAINING: Power / Download / Reset - Purging 18 Still Defective. — Program to be Check / P500 I.F Unit At Console. —

Also Annunciate Unit (FANS) on 6th FP Not Displaying Current Events

Account Billing. - Showing Acc Billing - | R.U.N TIME ERROR 3021 NO CURRENT RECORD

FCI 155
REV 6186 NOTIFIED HARRY on FAX / DALE'S DEPT

FIRE SERVICE INCORPORATED

94436

SUBSIDIARY OF FIRECOM INC.
39-27 FIFTY NINTH STREET
WOODSIDE, NEW YORK 11377
(718) 899-2311

REPORT OF FIELD SERVICE

INVOICE TO

SERVICED

TWA
New York, N.Y.

CALL AUTHORIZED BY	CONTRACT #	FEE SERVICE #	FJ #	P O #	SEE AT JOB SITE
	SC00818				T-5 D

PHONE	EXT	DATE SCHEDULED	TIME SCHEDULED	SERVICEMAN ASSIGNED
		4/25/01	A.M.	Frank L.

MATERIAL RECORD

QUANTITY ISSUED	QUANTITY B/O	FCI NO	DESCRIPTION	UNIT PRICE	PER	TOTAL AMOUNT
			PREVENTIVE MAINTENANCE CONTRACT			

CHECK APPROPRIATE BOX

- ☐ Q.C
- ☐ I & T
- ☐ FEE CALL
- ☐ DELIVERY
- ☐ DEMO
- ☐ EMERGENCY CALL
- ☑ CONTRACT CALL
- ☐ PICK UP
- ☐ DEMO OWNER
- ☐ SURVEY

DEPARTED SHOP	TIME IN	TIME OUT	RETURNED SHOP	TOTAL HOURS	START MILEAGE	END MILEAGE	MISC EXPENSE	CAR FARE
	8:00 A.M.	4:30 P.M.						

☐ MAT REQD ☐ PARTIAL
☐ OTHER ☐ LABOR REQD

I & T COMPLETE ☐ CALL COMPLETE ☐

SERVICE DATE: 4/25/01

WILL RETURN ON

CUSTOMER SIGNATURE

SERVICEMAN SIGNATURE

AUTHORIZATION FOR FIRE ALARM INTERRUPTION

The undersigned has been advised by Fire Service, Inc. representative that it may be necessary to interrupt the fire protection service by disconnecting the system and/or a component in the performance of their assigned work.

The undersigned hereby assumes the responsibility for the notification of the authorities at the time the interruption is initiated and will take all of the precautions deemed necessary during the period of interruption and hold harmless Fire Service Inc. and its employees regarding interruption of fire protection service during their service of the equipment.

Date

Name

PROBLEM—AS DESCRIBED

Service Contract

SERVICE PERFORMED

Assisting Tech. Tim Lasser on the repairs of strobe panels on 4th Floor & 11th Floor 39th Ave 46th Floors. Also on the replacing of batteries on 7th, 8th and 39th Floors. Also Assisting on the Cleaning of Purge and Pressurization of the 18th Floor. See Service Report # 97452.

WORK REMAINING

FCI 155
REV 6186

FIRE SERVICE INCORPORATED

23476

Subsidiary of Firecom, Inc.
39-27 Fifty Ninth Street
Woodside, New York 11377
(718) 899-2311

REPORT OF FIELD SERVICE

LOCATIONS | **DEVICES**

FLOOR	AREAS			CABLE	XTNDR	S/D	TEST CLEAN
42	PASS/FREIGHT		(2)	2	019	BRK	✓
	ELECT	A-B	(2)	2	211	BLK	✓
	COMM	A-B	(2)	2	211	BLK	✓
	TELEPH	A-B	(2)	2	211	BLK	✓
	SUPV	'C'		2	210	Apollo	✓
	TOWER	'C'		2	210	Apollo	✓
	ELECT	C		2	210	Apollo	✓
	COAT	D		2	210	Apollo	✓
42	CORE	HEY AREA (2)		2	212	Apollo	✓
42	CORE	HEY D/D (2)		2	017	Apollo	✓
	SHUTTLE	ELEV. PASS		4	008	PEC3	✓
	ELECT	D		2	210	Apollo	✓
	COAT/STORAGE	'D'	FTB	2	210	PEC3	✓
42	'G' ELECT/SER.		(2)	4	080	PEC3	✓
43	PASS/FREIGHT		(2)	2	020	BLK	✓
	ELECT	A-B	(2)	2	213	BLK	✓
	TELEPH	A-B	(2)	2	213	BLK	✓
	COMM	A-B	(2)	2	213	BLK	✓
	COMM	C-D	(2)	2	212	BLK	✓
	TELEPH	C-D	(2)	2	212	BLK	✓
	ELECT	C-D	(2)	2	212	BLK	✓
	CORE	HEL AREA	2	2	253	Apollo	✓
	(BREAK)	D/D	2	2	018	Apollo	✓
	ELECT 'G'			4	081	BLK	✓
43	SECURITY			4	081	PEC3T	✓
	SHUTTLE	ELEV. PASS		4	009	PEC3	✓
43	'F' ELECT	NO S/D IN PREMISES: —					

INVOICE TO: T.W.T.C. (SOLOMON BROTHERS N.Y.C. -)

SERVICEMAN ASSIGNED	SEE AT JOB SITE
J. TORRES	F.S.I.
	DATE SCHEDULED: 4-24-01
CONTRACT #: S/C00818	TYPE OF SYSTEM: LSN 2000
FEE SERVICE #	P.O. #
CALL AUHTORIZED BY	PHONE / EXT

☐ MAINTENANCE ☐ TEST
☐ JOB COMPLETE ☑ JOB INCOMPLETE
☐ SYSTEM ON LINE ☐ SYSTEM OFF LINE

DEPARTED SHOP	TIME IN	TIME OUT	RETURNED SHOP	TOTAL HOURS
AM PM	800 AM PM	430 AM PM	AM PM	

MATERIAL RECORD

QUANTITY	DESCRIPTION	COST
4	BATTERIES 12 VOLT	6995
	(STROBE P&C'S)	

PREVENTIVE MAINTENANCE CONTRACT

CUSTOMER NAME (PRINT)
CUSTOMER SIGNATURE
SERVICEMAN SIGNATURE

AUTHORIZATION FOR FIRE ALARM INTERRUPTION
The undersigned has been advised by Fire Service Inc. representative that it may be necessary to interrupt the fire protection service by disconnecting the system and/or a component in the performance of their assigned work.
The undersigned hereby assumes the responsibility for the non-closure of the authorities at the time the interruption is initiated and will take all of the precautions deemed necessary during the period of interruption and hold harmless Fire Service Inc. and its employees regarding interruption of fire protection service during their service of the equipment.

TIME / DATE / NAME

SERVICE PERFORMED & REMAINING: SERVICE CONTRACT PREV MAINT. ON SMOKE DETECTORS ON FLOOR'S 43 & 42ND AT LISTED ABOVE. - DEFICIENCY BATTERIES. - 42ND FR. FREIGHT ELEV. UNIT - POOR SENS. NEED TO BE REPLACED. - TO CONTINUE. - SYSTEM BACK IN OPERATION - 43'F'/ (1) 'F' ELECT CLOSET - S/D (MISSING/NEED UNIT TO BE WIRED/INSTALLED).

(A) INACCESSIBLE (B) MISSING (C) DEFECTIVE (D) OTHER

(3) BATTERIES TO BE REPLACED ON 7 & 8TH FL. - STROBE P&C'S. -

FIRE SERVICE INCORPORATED

94437

SUBSIDIARY OF FIRECOM INC.

39-27 FIFTY NINTH STREET
WOODSIDE, NEW YORK 11377
(718) 899-2311

REPORT OF FIELD SERVICE

INVOICE TO

SERVICED

Twtc
New York, N.Y.

CALL AUTHORIZED BY		CONTRACT #	FEE SERVICE #	FJ #	PO #	SEE AT JOB SITE
		SC00818				F.S.D.
PHONE	**EXT.**	**DATE SCHEDULED**	**TIME SCHEDULED**			**SERVICEMAN ASSIGNED**
		4/24/01	P.M.			Frank R.

MATERIAL RECORD

QUANTITY ISSUED	QUANTITY B/O	F C I NO	DESCRIPTION	UNIT PRICE	PER	TOTAL AMOUNT
			PREVENTIVE MAINTENANCE CONTRACT			

CHECK APPROPRIATE BOX

- ☐ Q. C
- ☐ I & T
- ☐ FEE CALL
- ☐ DELIVERY
- ☐ DEMO
- ☐ EMERGENCY CALL
- ☑ CONTRACT CALL
- ☐ PICK UP
- ☐ DEMO OWNER
- ☐ SURVEY

DEPARTED SHOP	TIME IN	TIME OUT	RETURNED SHOP	TOTAL HOURS	START MILEAGE	END MILEAGE	MISC EXPENSE	CAR FARE
	8:00 AM	4:30 P.M.						

- ☐ MAT REQD ☐ PARTIAL
- ☐ OTHER ☐ LABOR REQD

SERVICE DATE: 4/24/01

CUSTOMER SIGNATURE:

WILL RETURN ON:

SERVICEMAN SIGNATURE: Frank Lepis

I & T COMPLETE ☐ CALL COMPLETE ☐

PROBLEM—AS DESCRIBED

Service Contract

SERVICE PERFORMED

Assisting Tech. James Torres On The Performing Of The Service Contract
Full Cleaning And Testing Of The Area
Smoke Detectors And Heat Detectors
On 43rd And 42nd Floors
See Service report # 23476.

WORK REMAINING

AUTHORIZATION FOR FIRE ALARM INTERRUPTION

The undersigned has been advised by Fire Service, Inc. representative that it may be necessary to interrupt the fire protection service by disconnecting the system and/or a component in the performance of their assigned work.

The undersigned hereby assumes the responsibility for the notification of the authorities at the time the interruption is initiated and will take all of the precautions deemed necessary during the period of interruption and hold harmless Fire Service Inc. and its employees regarding interruption of the protection service during their service of the equipment

Name

Date

X

FCI 155
REV 6186

FIRE SERVICE INCORPORATED 77450

SUBSIDIARY OF FIRECOM INC.

39-27 FIFTY NINTH STREET
WOODSIDE, NEW YORK 11377
(718) 899-2311

REPORT OF FIELD SERVICE

INVOICE TO

SERVICED

7WTC
New York, N.Y.

CALL AUTHORIZED BY		CONTRACT #	FEE SERVICE #	FJ #	P O #	SEE AT JOB SITE
		SC00818				F.S.I.
PHONE	EXT	DATE SCHEDULED	TIME SCHEDULED			SERVICEMAN ASSIGNED
		4/21/01	AM.			Frank R.

MATERIAL RECORD

QUANTITY ISSUED	QUANTITY B/O	FCI NO	DESCRIPTION	UNIT PRICE	PER	TOTAL AMOUNT
					PREVENTIVE MAINTENANCE CONTRACT	

CHECK APPROPRIATE BOX

- ☐ O.C
- ☐ I & T
- ☐ FEE CALL
- ☐ DELIVERY
- ☐ DEMO
- ☐ EMERGENCY CALL
- ☑ CONTRACT CALL
- ☐ PICK UP
- ☐ DEMO OWNER
- ☐ SURVEY

DEPARTED SHOP	TIME IN	TIME OUT	RETURNED SHOP	TOTAL HOURS	START MILEAGE	END MILEAGE	MISC EXPENSE	CAR FARE
	7:00 AM	3:30 PM						

- ☐ MAT REQD ☐ PARTIAL
- ☐ OTHER ☐ LABOR REQD

I & T COMPLETE ☐ CALL COMPLETE ☐

SERVICE DATE: 4/21/01

WILL RETURN ON

CUSTOMER SIGNATURE: (PRINT)

SERVICEMAN SIGNATURE: Frank Fonseca

AUTHORIZATION FOR FIRE ALARM INTERRUPTION

The undersigned has been advised by Fire Service, Inc. representative that it may be necessary to interrupt the fire protection service by disconnecting the system and/or a component in the performance of their assigned work.

The undersigned hereby assumes the responsibility for the notification of the authorities at the time the interruption is initiated and will take all of the precautions deemed necessary during the period of interruption and hold Harmless Fire Service Inc. and its employees regarding interruption of fire protection service during their service of the equipment.

Date

Name

PROBLEM—AS DESCRIBED

Service Contract

SERVICE PERFORMED

Assisting Temp Tower Tech. on the Cleaning and testing of the Smoke and Heat detectors, over the Elevator Motor room and Elevator Shafts from 48th Floor Down to 43rd Floor.

See report #23475

WORK REMAINING

FCI 155
REV 6186

FIRE SERVICE INCORPORATED

23475

Subsidiary of Firecom, Inc.
39-27 Fifty Ninth Street
Woodside, New York 11377
(718) 899-2311

REPORT OF FIELD SERVICE

LOCATIONS | **DEVICES**

FLOOR				CABLE	XTNDR	S/D	CLEAN TEST
48	ROOF	E.H.R	CAB. 31	2	226	BLK	✓
47	SHUTTLE	ELEV. SHAFT		4	037	PEC3T	✓
47	SHUTTLE	ELEV. SHAFT		4	037	PEC3T	✓
47	E.H.R/	AREA	CAB 29-30	2	224	BLK	✓
47	ELEV. SHAFT	CAB: 44/47		4	037	PEC3T	✓
	BANK	H - SHUTTLE -					
47	E.H.R	CAB 3	21-28	2	220	BLK	✓
47	E.H.R	AREA	21-28	2	220	BLK	✓
47	E.H.R	AREA	21-28	2	220	BLK	✓
47	E.H.R	AREA	21-28	2	220	BLK	✓
47	E.H.R	AREA	21-28	2	220	BLK	✓
47	E.H.R	AREA	21-28	2	220	BLK	✓
46	KITCHEN	SHUTTLE	CAB 38	4	036	PEC3T	✓
	SHAFT	BANK K - (PIPE)					
46	FREIGHT	SHUTTLE	H.K.E-1 AREA. E.H.R CAB 38				
	BANK J	—		4	036	PEC3T	✓
47	E.H.R	AREA -	32-33	4	067	PEC3T	✓
46	E.H.R	H.K.E-1 AREA		4	065	PEC3T	✓
	CAB'S 2-3						
46	E.H.R	H.K.E-1 - AREA		4	066	PEC3	✓
	BANK J CAB 37						
46	SHAFT	SHUTTLE CAB. 37		4	036	PEC3T	✓
	BANK J. CAB 37						
43	E.H.R	AREA	61-2	4	064	PEC3	✓
	CAB'S	34-35	BATH ENT./LADIES -				

INVOICE TO:
7 W.T.C.
SILVERSTEIN PROP.
N.Y.C.

SERVICEMAN ASSIGNED: L. TORRES / F. ROSALIU	SEE AT JOB SITE: F.S.I
	DATE SCHEDULED: SAT 4-21-01
CONTRACT #: S/C 00818	TYPE OF SYSTEM: LSN 2000
FEE SERVICE #	P.O. #
CALL AUHTORIZED BY	PHONE / EXT

☒ MAINTENANCE ☐ TEST
☐ JOB COMPLETE ☐ JOB INCOMPLETE
☐ SYSTEM ON LINE ☐ SYSTEM OFF LINE

DEPARTED SHOP	TIME IN	TIME OUT	RETURNED SHOP	TOTAL HOURS
AM / PM	7:30 AM / PM	3:30 PM	AM / PM	

MATERIAL RECORD

QUANTITY	DESCRIPTION	COST
	PREVENTIVE MAINTENANCE CONTRACT	

CUSTOMER NAME (PRINT)
CUSTOMER SIGNATURE — ATTMED
SERVICEMAN SIGNATURE

AUTHORIZATION FOR FIRE ALARM INTERRUPTION
The undersigned has been advised by Fire Service Inc. representatives that it may be necessary to interrupt the fire protection service by disconnecting the system and/or a component in the performance of their assigned work.
The undersigned hereby assumes the responsibility for the notification of the authorities at the time the interruption is initiated and will take all of the precautions deemed necessary during this period of interruption and hold harmless Fire Service Inc. and its employees regarding interruption of fire protection service during their service of the equipment.

TIME
DATE
NAME

SERVICE PERFORMED & REMAINING: SERVICE CONTRACT - PREVENTIVE MAINTENANCE SMOKE DETECTION SYSTEM UNIT BY ELEVATOR'S SHAFTS & ELEV. MOTOR RM'S ASISTED BY OTIS MECH (BOB) - UNITS TESTED/CLEANED MONITORED/RESET AT F.C. STATION OUTPUTS - NORMAL - SYSTEM BACK IN OPERATION. — TO BE CONTINUED

(A) INACCESSIBLE (B) MISSING (C) DEFECTIVE (D) OTHER

FIRE SERVICE INCORPORATED

23474

Subsidiary of Firecom, Inc.
39-27 Fifty Ninth Street
Woodside, New York 11377
(718) 899-2311

REPORT OF FIELD SERVICE

LOCATIONS | **DEVICES**

FLOOR	AREA	DEVICE		CABLE	X/NODE	S/D	TEST GRAM
38	W. HEL. AREA			4	028	PEC 3T	✓
	W. HEL. D/D			4	0100	HOCHIKI	✓
	ELECT	A-B	(2)	2	202	BLK	✓
	TELEPH	A-B	(2)	2	202	BLK	✓
	COMM	A-B	(2)	2	202	BLK	✓
	ELECT	C		2	203	BLK	✓
	ELECT	D		2	203	BLK	✓
	ELECT	D.W.		2	203	EDWDS	✓
	ELECT	F		4	052	PEC 3	✓
	ELECT	G		4	076	PEC 3	✓
	SECURITY			4	076	PEC 3	✓
	PASS/FREIGHT	ELEV.	(2)	2	015	BLK	✓
	ELEV. SHUTTLE			4	004	PEC 3	✓
	CORE HEL AREA		(3)	2	004	PEC 3T	✓
	CORE AREA D/D		(2)	2	005	HOCHIKI	✓
	W. HEL AUDITY AREA			4	046	PEC 3T	✓
	W. HEL D/D AUDITY			4	127	EDWDS	✓
39	ELECT	A-B	(2)	2	205	BLK	✓
	COMM	A-B	(2)	2	205	BLK	✓
	TELEPH	A-B	(2)	2	205	BLK	✓
	ELECT	C		2	204	BLK	
	ELECT	D.W		2	204	BLK	
	ELECT	DF		2	053	PEC 3	
	ELECT	G		4	077	PEC 3	
	SECURITY CLOSET			4	077	PEC 3	
	ELECT	D1		2	204	BLK	
	FREIGHT/PASS ELEV		(2)	2	016	BLK	
	ELEV. SHUTTLE			4	005	PEC 3	
	RECP. CEILING D/D		(2)	2	254	APOLLO	
	RECEP. CEILING D/D/SMK		(3)	2	254	APOLLO	
	CORE HEL AREA		(3)	2	006	PEC 3	
	CORE D/DET.		(2)	2	007	HOCHIKI	
	W. HEL AREA			4	029	PEC 3T	
	W. HEL. D/D.			4	101	EDWDS	

INVOICE TO: T. W. I. C.
(SOLOMON/SMITH BARNEY)
N.Y.C.

SERVICEMAN ASSIGNED	SEE AT JOB SITE
J. TORRES / P. TABARES	F.S.I.
	DATE SCHEDULED: 4-18-01
CONTRACT #: S/C 00818	TYPE OF SYSTEM: CSN 2000
FEE SERVICE #	P.O. #
CALL AUHTORIZED BY	PHONE / EXT

☒ MAINTENANCE ☐ TEST
☐ JOB COMPLETE ☐ JOB INCOMPLETE
☐ SYSTEM ON LINE ☐ SYSTEM OFF LINE

DEPARTED SHOP	TIME IN	TIME OUT	RETURNED SHOP	TOTAL HOURS
AM/PM	8:00 AM	4:30 PM	AM/PM	

MATERIAL RECORD

QUANTITY	DESCRIPTION	COST
	PREVENTIVE MAINTENANCE CONTRACT	

CUSTOMER NAME (PRINT): SILVERSTEIN
CUSTOMER SIGNATURE:
SERVICEMAN SIGNATURE:

AUTHORIZATION FOR FIRE ALARM INTERRUPTION
The undersigned has been advised by Fire Service Inc. representatives that it may be necessary to interrupt the fire protection service by disconnecting the system and/or a components in the performance of their assigned work.
The undersigned hereby assumes the responsibility for the notification of the authorities at the time the interruption is initiated and will take all of the precautions deemed necessary during this period of interruption and hold harmless Fire Service Inc. and its employees regarding interruption of fire protection service during their service of the equipment.

NAME _____ DATE _____ TIME _____

SERVICE PERFORMED & REMAINING: SERV. CONTRACT - PREV. MAINT. SMOKE DETECTION (SOLOMON) FLOOR'S 39 & 38' AS LISTED ALL BELL CLOSET'S. SYSTEM OK/RESET'S. - AT F.C. STATION. - BACK TO NORMAL OPERATION. -

ALSO CHECK AS PER F.S.I. STROBE (PNL) 7th & 8th FL. VISUAL ALARM. - FOUND TO LOW BATTERIES 12VLT/7AH. TO BE REPLACED (2) SETS. -

(A) INACCESSIBLE (B) MISSING (C) DEFECTIVE (D) OTHER

FIRE SERVICE INCORPORATED

23470

Subsidiary of Firecom, Inc.
39-27 Fifty Ninth Street
Woodside, New York 11377
(718) 899-2311

REPORT OF FIELD SERVICE

LOCATIONS | **DEVICES**

INVOICE TO: J.W.T.C. Silverstein Prop. N.Y.C.

FLOOR				CABLE	XTN/DR	S/O	TST CHAN
44	ELECT	A		2	215	BLK	✓
	COMM	A		2	215	BLK	✓
	TELEPH	A		2	215	BLK	✓
	PASS	ELEV.		2	021	BLK	✓
	ELEC	B		2	215	BLK	✓
	COMM	B		2	215	BLK	✓
	TELEPH	B		2	215	BLK	✓
44	FREIGHT	ELEV.		2	021	BLK	✓
	ELECT	G		4	082	PEC3	✓
	SECURITY	CLOSET		4	082	PEC3	✓
	SHUTTLE	ELEV.		4	010	PEC3	✓
	SHUTTLE	ELEV.		2	018	PEC3	✓
	WEST	FAN RM	D/D	4	112	EDWARDS	✓
	WEST	FAN RM	AREA	4	034	PEC3T	✓
44	ELECT	F		4	058	PEC3	✓
2ND	ELECT	D		1	163	BLK	✓
2ND	FRONT	ENT -	HIGH CEILING	1	163	BLK	✓
2ND	"	"	"	1	163	BLK	✓
2ND	"	"	"	1	163	BLK	✓
2ND	"	"	"	1	163	BLK	✓
2ND	FRONT	ENT.	ESCALATOR	1	163	BLK	✓
	●	●	●	●	[illegible]	[illegible]	●
2ND	HALLWAY	DISPLAY	LOBBY	1	163	BLK	✓
	"	"	"	1	163	BLK	✓
2ND	FAN RM	EAST	D/D	1	270	HOCHKIS	✓
1ST	FREIGHT	ELEV.		1	000	PEC3	✓
	PUMP RM		(2)	1	160	BLK	✓
	ELECT	A		1	160	BLK	✓
	TRASH	RM	LOUNGE	1	160	PEC3T	✓
	HANDICAP	ELEV	LOBBY	1	000	BLK	✓
1ST	LOW	CEILING	LOBBY (2)	1	161	BLK	✓
1ST	ELECT	D		1	161	BLK	✓

SERVICEMAN ASSIGNED: L. Tomp, F. Posakio

SEE AT JOB SITE: F.J.

DATE SCHEDULED: 4-11-01

CONTRACT #: SK00818

TYPE OF SYSTEM: LSN2000

FEE SERVICE #:

P.O. #:

CALL AUHTORIZED BY:

PHONE:

EXT:

☐ MAINTENANCE ☒ TEST

☐ JOB COMPLETE ☐ JOB INCOMPLETE

☐ SYSTEM ON LINE ☐ SYSTEM OFF LINE

AUTHORIZATION FOR FIRE ALARM INTERRUPTION
The undersigned has been advised by Fire Service Inc. representative that it may be necessary to interrupt the fire protection service by disconnecting the system and/or a component as the performance of their assigned work.
The undersigned hereby assumes the responsibility for the notification of the authorities at the time the interruption is initiated and will take all of the precautions deemed necessary during this period of interruption and hold harmless Fire Service Inc. and its employees regarding interruption of the protection service during their service of the equipment.

NAME: _____ DATE: _____ TIME: _____

DEPARTED SHOP	TIME IN	TIME OUT	RETURNED SHOP	TOTAL HOURS
AM PM	8 AM	4:30 PM	AM PM	

MATERIAL RECORD

QUANTITY	DESCRIPTION	COST
	PREVENTIVE MAINTENANCE CONTRACT	

CUSTOMER NAME (PRINT): SILVERSTEIN

CUSTOMER SIGNATURE:

SERVICEMAN SIGNATURE: Frank Posakio

SERVICE PERFORMED & REMAINING

SERVICE CONTRACT / PREV. MAINTENANCE SMOKE DETECTION UNITS ON 44TH QUAD 2ND / 1ST FL. LOBBIES AS LISTED ABOVE (SILVERSTEIN ACCT.) — USED OF "GENIE BOOM" TO REACH HIGH CEILING LOBBY ENTRANCE. — SYSTEM OKAY RESET BACK TO OPERATION. —

(A) INACCESSIBLE (B) MISSING (C) DEFECTIVE (D) OTHER

FIRE SERVICE INCORPORATED

23468

Subsidiary of Firecom, Inc.
39-27 Fifty Ninth Street
Woodside, New York 11377
(718) 899-2311

REPORT OF FIELD SERVICE

LOCATIONS | **DEVICES**

FLOOR	AREA'S		CABLE	STA/ZN	S/D	TST/CLEAN
47	STAIR 'A'-ELEV.		2	024	BLK	✓
	ELEV. SHUTTLE		4	016	PEC3T	✓
	SECURITY CLOSET		4	085	PEC3	✓
	ELECT 'G'		4	085	PEC3	✓
	ELECT A		2	222	BLK	✓
	ELECT B		2	222	BLK.	✓
	ELECT 'C'		2	223	BLK	✓
	ELECT F		4	061	PEC3	✓
	TELEPH B		2	222	BLK	✓
	'B' STAIRWAY (LOBBY)		2	221	EDWDS	✓
	TELEPH 'A'		2	222	BLK	✓
	COMM D		2	223	BLK	✓
	CUSHMAN OFFICE AREA		4	113	EDWDS	✓
	SHAFT VERTICAL CONV.		4	068	EDWDS	✓
	W. MER		4	069	EDWDS	✓
	W. MER D/D 47-1		4	115	EDWDS	✓
	CORE MER D/D		2	023	[illegible]	✓
	CORE MER AREA (3)		2	022	PEC3	✓
46	FREIGHT ELEV. KEY		2	023	BLK	✓
	ELEV. SHUTTLE 'F'		4	014	PEC3	✓
	ELEV. SHUTTLE 'H'		4	015	PEC3	✓
	KITCHEN SHUTTLE ELEV		4	013	PEC3	✓
	ELECT 'G'/SEC. (2)		4	084	PEC3	✓
	ELECT B		2	219	BLK	✓
	COMM B		2	219	BLK	✓
	ELECT A		2	218	BLK	✓
	COMM A		2	218	BLK	✓
	TELEPH A		2	218	BLK	✓
	TELEPH D		2	219	BLK	✓
	ELECT D		2	219	BLK	✓
	COMM D		2	219	BLK	✓
	CORE MER D/D (2)		2	021	BLACK	✓
	CORE MER AREA (3)		2	020	PEC3	✓
	ELECT F		4	060	PEC3	✓
	ELECT C		2	219	PEC3	✓

INVOICE TO: T.W.T.C. Silverstein Prop. N.Y.C.

SERVICEMAN ASSIGNED: J. TORRES / F. ROSARIO	SEE AT JOBSITE: 7.5.1
	DATE SCHEDULED: 4-10-01
CONTRACT #: S/C00 818	TYPE OF SYSTEM: LSN 2000
FEE SERVICE #	P O #
CALL AUHTORIZED BY	PHONE / EXT

☒ MAINTENANCE ☒ TEST
☐ JOB COMPLETE ☐ JOB INCOMPLETE
☐ SYSTEM ON LINE ☐ SYSTEM OFF LINE

DEPARTED SHOP	TIME IN	TIME OUT	RETURNED SHOP	TOTAL HOURS
AM / PM	9:30 AM / PM	4:30 PM	AM / PM	

MATERIAL RECORD

QUANTITY	DESCRIPTION	COST
	PREVENTIVE MAINTENANCE CONTRACT	

CUSTOMER NAME (PRINT): SILVERSTEIN
CUSTOMER SIGNATURE:
SERVICEMAN SIGNATURE:

AUTHORIZATION FOR FIRE ALARM INTERRUPTION
The undersigned has been advised by Fire Service Inc. representative that it may be necessary to interrupt the fire protection service by disconnecting the system and/or a component in the performance of their assigned work.
The undersigned hereby assumes the responsibility for the notification of the authorities at the time the interruption is initiated and will take all of the precautions deemed necessary during this period of interruption and hold harmless Fire Services Inc. and its employees regarding interruption of fire protection service during their service of the equipment.

NAME / DATE / TIME

SERVICE PERFORMED & REMAINING: SEVICE CONTRACT — PREV. MAINTENANCE SMOKE DETECTION UNITS - CLASS E SYSTEM — ON FLOORS 47-46" - AREAS/LOCATIONS AS LISTED ABOVE. — EQUIP/ACK/RESET PROPERLY. —

(A) INACCESSIBLE (B) MISSING (C) DEFECTIVE (D) OTHER

FIRE SERVICE INCORPORATED

23465

Subsidiary of Firecom, Inc.
39-27 Fifty Ninth Street
Woodside, New York 11377
(718) 899-2311

REPORT OF FIELD SERVICE

LOCATIONS			DEVICES				
FLOOR			S/D	CODE	XTNGR	TEST CLEAN
6	SWITCHGEAR	VAULT	BRK	1	171	✓
	"	"	BRK	1	171	✓
	"	"	BRK	1	171	✓
	"	"	BRK	1	171	✓
	"	"	BRK	1	171	✓
	HIGH VOLTAGE	VAULT	BRK	1	171	✓
6	HIGH VOLTAGE	VAULT	(X4) BRK	1	171	✓
	"	"	(4) BRK	1	171	✓
	"	"	(4) BRK	1	171	✓
5	H.V. VAULT	(X6)	BRK	1	170	✓
5	H.V. VAULT	(X6)	BRK	1	170	✓
5	SWITCH GEAR	NORTH	BRK	1	170	✓
	SWITCH GEAR	NORTH	BRK	1	170	✓
	SWITCH GEAR	NORTH	BRK	1	170	✓
5	SWITCH GEAR	SOUTH	BRK	1	170	✓
	SWITCH GEAR	SOUTH	BRK	1	170	✓
18	CORE HER STROBE PNL AFC 101 Mo #2 (2) BATTERIES Replaced) EACH: TROUBLE Hist BACK UP panel					✓

PREVENTIVE MAINTENANCE CONTRACT

INVOICE TO:
J.W. T.C.
SILVERSTEIN PROP.
N.Y.C.

SERVICEMAN ASSIGNED	SEE AT JOB SITE
J. JONES	F.S.I.
	DATE SCHEDULED: 4-4-01
CONTRACT # S/C 00818	TYPE OF SYSTEM LW2000
FEE SERVICE #	P.O. #
CALL AUHTORIZED BY	PHONE / EXT

☒ MAINTENANCE ☒ TEST
☐ JOB COMPLETE ☐ JOB INCOMPLETE
☐ SYSTEM ON LINE ☐ SYSTEM OFF LINE

DEPARTED SHOP	TIME IN	TIME OUT	RETURNED SHOP	TOTAL HOURS
AM PM	800 AM PM	430 AM PM	AM PM	

AUTHORIZATION FOR FIRE ALARM INTERRUPTION
The undersigned has been advised by Fire Service Inc. representative that it may be necessary to interrupt the fire protection system by disconnecting the system and/or a component in the performance of their assigned work.
The undersigned hereby assumes the responsibility for the notification of the authorities at the time the interruption is instated and will take all of the precautions deemed necessary during this period of interruption and hold harmless Fire Service Inc. and its employees regarding interruption of fire protection service during their service of the equipment.

NAME _____ DATE _____ TIME _____

MATERIAL RECORD

QUANTITY	DESCRIPTION	COST
2	BATTERIES 12VOLT PNL (STROBE PNL)	19.95

CUSTOMER NAME (PRINT) SILVERSTEIN
CUSTOMER SIGNATURE Jennifer Cavanaugh
SERVICEMAN SIGNATURE J. Jones Frank Vegas

SERVICE PERFORMED & REMAINING
PREV. MAINTENANCE Smoke Detection Silverstein Access Only on 6th / 5th Fl. Co Listing (High Voltage Vaults - Escorted Keeper) Also Repairs done on 18th Fl STROBE PNL. (101) BATTERIES

(A) INACCESSIBLE (B) MISSING (C) DEFECTIVE (D) OTHER

Replaced) O.K.

FIRE SERVICE INCORPORATED

23466

Subsidiary of Firecom, Inc.
39-27 Fifty Ninth Street
Woodside, New York 11377
(718) 899-2311

REPORT OF FIELD SERVICE

LOCATIONS		DEVICES				
FLOOR	AREA'S.	CABLE	XTN/PL	S/D	Alarm Trouble TEST
3RD	HALLWAY TOP ESCALATR	1	166	BLK	✓
	HALLWAY TOP ESCALATR	1	166	BLK	✓
	TELEP A	1	166	BLK	✓
	COMM A	1	166	BLK	✓
	ELECT A	1	166	BLK	✓
	COMM B	1	166	BLK	✓
	COMM/TELE B	1	166	BLK	✓
3	FREIGHT ELEV LOBBY	1	0021	BLK	✓
	PASS ELEV. LOBBY (4-13-14-4)		002	BLK	✓
	ELEV. MIN RISE (22-28)	1	166	BLK	✓
	ELEV. MAX RISE (36-45)	1	166	BLK	✓
	ELEV MIN RISE (22-28)	1	0021	BLK	✓
	(REPAIRS/RESET'S TAMPER'S)				
45	TAMPER S/W	2	147		✓
	ALARM/RESETED. ADJUSTED.				
42	TAMPER S/W	2	139		✓
	ALARM/RESETED ADJUSTED.				
40	TAMPER S/W	2	137		✓
	TROUBLE/REPAIRED (WIRING BROKEN)				
37	TAMPER S/W	2	135		✓
	ALARM/RESETED ADJUSTED.				
20	TAMPER S/W	2	143		✓
	ALARM/RESETED/ADJUSTED.				

INVOICE TO: T.W.T.C.

N.Y.C.

SERVICEMAN ASSIGNED	SEE AT JOB SITE
J. TORRES / F. ROSARIO	F-J-O
	DATE SCHEDULED: 4-3-01
CONTRACT # S/C00818	TYPE OF SYSTEM: LSH 2000
FEE SERVICE #	P.O. #
CALL AUHTORIZED BY	PHONE / EXT

☒ MAINTENANCE ☒ TEST
☐ JOB COMPLETE ☐ JOB INCOMPLETE
☐ SYSTEM ON LINE ☐ SYSTEM OFF LINE

AUTHORIZATION FOR FIRE ALARM INTERRUPTION
The undersigned has been advised by Fire Service Inc. representative that it may be necessary to interrupt the fire protection service by disconnecting the system and/or a component in the performance of their assigned work.
The undersigned hereby assumes the responsibility for the notifications of the authorities at the time the interruption is initiated and will take all of the precautions deemed necessary during this period of interruption and hold harmless Fire Service Inc. and its employees regarding interruption of the protection service during their service of the equipment.

NAME _____ DATE _____ TIME _____

DEPARTED SHOP	TIME IN	TIME OUT	RETURNED SHOP	TOTAL HOURS
AM/PM	800 AM/PM	430 PM	AM/PM	

MATERIAL RECORD

QUANTITY	DESCRIPTION	COST
	PREVENTIVE MAINTENANCE CONTRACT	

CUSTOMER NAME (PRINT) SILVERSTEIN
CUSTOMER SIGNATURE
SERVICEMAN SIGNATURE

SERVICE PERFORMED & REMAINING: SERVICE CONTRACT PREVENTIVE MAINTENANCE ON ELEVATOR UNITS FLOOR'S 3RD (SILVERSTEIN AREA) - ONLY. - ALSO ADJUSTED ALARM/RESETED ON TAMPER S/W ON MAIN (LOBBY AREA) B RISER ONLY - OS&Y-10. - UNITS BACK ON SERVICE. -

(A) INACCESSIBLE (B) MISSING (C) DEFECTIVE (D) OTHER

FIRE SERVICE INCORPORATED

Subsidiary of Firecom, Inc.
39-27 Fifty Ninth Street
Woodside, New York 11377
(718) 899-2311

11842

REPORT OF FIELD SERVICE

LOCATIONS | **DEVICES**

FLOOR	AREAS/JOBS	PAGE	XTNSN	S/D	TST/CLEAN
23	PASS ELEV.	2	000	BRK	✓
	CORR B	2	169	BRK	✓
	ELECT B	2	169	BRK	✓
	TELEPH B	2	169	BRK	✓
	ELECT A	2	169	BRK	✓
	CORR A	2	169	BRK	✓
	TELEPH A	2	169	BRK	✓
	CORE MECH D/D.	2	228	HOCHKI	✓
	CORE MECH D/D	2	228	HOCHKI	✓
	ELECT C	2	168	BRK	✓
	CORR C	2	168	BRK	✓
	TELEPH C	2	168	BRK	✓
	FREIGHT ELEV	2	000	BRK	✓
	CORR D	2	168	BRK	✓
	ELECT D	2	168	BRK	✓
	TELEPH D	2	168	BRK	✓
	RETURN D/D LADIES	2	227	HOCHKI	✓
*	RETURN D/D MENS	N/A - AS PREVIOUS			
*	RETURN D/D. SOUTH (SILVERSTEIN AREA)	N/A - AS PREVIOUS			
5	FAN RM - STEAM RM D/D	223	HOCHKI	✓	
5	FAN RM DUCT DET.	1	224	HOCHKI	✓
5	FAN RM DUCT DET.	1	228	HOCHKI	✓
5	FAN RM DUCT DET	1	267	HOCHKI	✓
	AS REQUEST	/ MECH = SILVERSTEIN / D. CHAPELL. SCHAFFER			
32	CHECK TEST AUDIO VISUAL	/ (CORR. DISTRICT			
33	" " " "	" "			
	AS MR PAMPLIN REQUEST	/ P.A. TEST.			
	ACCESSIBILITY (DEVICES) INTENSITY.				

INVOICE TO:
W.T.C. Prop.
Silverstein Prop.
N.Y.C.

SERVICEMAN ASSIGNED	SEE AT JOB SITE
F. TORRES	F.S.I.
F. ROSARIO	DATE SCHEDULED 3-28-01
CONTRACT # S/C00818	TYPE OF SYSTEM LSN 2000
FEE SERVICE #	P O #
CALL AUHTORIZED BY	PHONE / EXT

☐ MAINTENANCE ☐ TEST
☐ JOB COMPLETE ☐ JOB INCOMPLETE
☐ SYSTEM ON LINE ☐ SYSTEM OFF LINE

DEPARTED SHOP	TIME IN	TIME OUT	RETURNED SHOP	TOTAL HOURS
AM PM	8:00 AM PM	4:30 AM PM	AM PM	

MATERIAL RECORD

QUANTITY	DESCRIPTION	COST
	PREVENTIVE MAINTENANCE CONTRACT	

CUSTOMER NAME (PRINT) Sam O'Keefe
CUSTOMER SIGNATURE
SERVICEMAN SIGNATURE

AUTHORIZATION FOR FIRE ALARM INTERRUPTION
The undersigned has been advised by Fire Service Inc. representative that it may be necessary to interrupt the fire protection service by disconnecting the system and/or a component in the performance of their assigned work.
The undersigned hereby assumes the responsibility for the notification of the authorities at the time the interruption is initiated and will take all of the precautions deemed necessary during the period of interruption and hold harmless Fire Service Inc. and its employees regarding interruption of fire protection service during their service of the equipment.

NAME DATE TIME

SERVICE PERFORMED & REMAINING

5/ CONTRACT — PREV. MAINTENANCE ON SMOKE DETECTION SYSTEM - CLASS E DEVICES LOCATED BY CLOSET'S AND CORE MECH. DUCT UNIT - ELEVATOR LOBBYES AS LISTED. — ALSO ASSIST BUILDING / SCHAFFER BROTHERS REQUEST P.A. TEST AUDIO/VISUAL ALARMS ON 32/33 FLOORS — AS REQUESTED MR. ED CAMPBELL OF HARTY SYSTEM ACK RECEIVED PROPERLY. — (FINAL OUT)

(A) INACCESSIBLE (B) MISSING (C) DEFECTIVE (D) OTHER

FIRE SERVICE INCORPORATED

:27005

Subsidiary of Firecom, Inc.
39-27 Fifty Ninth Street
Woodside, New York 11377
(718) 899-2311

REPORT OF FIELD SERVICE

LOCATIONS | **DEVICES**

FLOOR	AREA/ELECT		CAT/E	XMTR	S/D	TEST
10	ELECT	A	1	181	BLK	✓
10	COMM	A	1	185	BLK	✓
10	TELEPH	A	1	181	BLK	✓
10	COMM	B	1	181	BLK	✓
10	ELECT	B	1	181	BLK	✓
10	TELEPH	B	1	181	BLK	✓
10	PASS/FREIGHT	(2)	1	009	BLK	✓
10	ELECT	C	1	180	BLK	✓
10	COMM	C	1	180	BLK	✓
10	TELEPH	C	1	180	BLK	✓
10	TELEPH	D	1	180	BLK	✓
10	ELECT	D	1	180	BLK	✓
10	COMM	D	1	180	BLK	✓
10	CORE	HER (2)	1	241	HOOKI	✓
10	RETURN	DID (3)	1	240	HOOKI	✓
9	ELEV.	PASS	1	008	BLK	✓
9	COMM	A	1	179	BLK	✓
9	ELECT	A	1	179	BLK	✓
9	TELEPH	A	1	179	BLK	✓
9	ELECT	B	1	179	BLK	✓
9	COMM	B	1	179	BLK	✓
9	TELEPH	B	1	179	BLK	✓
9	FREIGHT	ELEV	1	008	BLK	✓
9	ELECT	C	1	178	BLK	✓
9	COMM	C	1	178	BLK	✓
9	TELEPH	C	1	178	BLK	✓
9	ELECT	D	1	178	BLK	✓
9	COMM	D	1	178	BLK	✓
9	TELEPH	D	1	178	BLK	✓
9	RETURN	DID SOUTH	1	238	HOOKI	✓
9	RETURN	DID NORTH	1	238	HOOKI	✓
9	RETURN	DID EAST	1	238	HOOKI	✓
9	CORE	HER DID	1	239	HOOKI	✓
9	CORE	HER DID	1	239	HOOKI	✓

INVOICE TO:
T.W.T.C.
Silverstein Prop.
N.Y.C.

SERVICEMAN ASSIGNED	SEE AT JOB SITE
J. Torres	F.S.I
F. Rosario	DATE SCHEDULED 3-27-01
CONTRACT # S/C00 818	TYPE OF SYSTEM LSN 2000
FEE SERVICE #	P.O #
CALL AUHTORIZED BY	PHONE / EXT

☑ MAINTENANCE ☑ TEST
☐ JOB COMPLETE ☐ JOB INCOMPLETE
☐ SYSTEM ON LINE ☐ SYSTEM OFF LINE

DEPARTED SHOP	TIME IN	TIME OUT	RETURNED SHOP	TOTAL HOURS
AM PM	800 AM PM	430 AM PM	AM PM	

MATERIAL RECORD

QUANTITY	DESCRIPTION	COST
	PREVENTIVE MAINTENANCE CONTRACT	

CUSTOMER NAME (PRINT) Sean Okeeffe
CUSTOMER SIGNATURE
SERVICEMAN SIGNATURE

AUTHORIZATION FOR FIRE ALARM INTERRUPTION
The undersigned has been advised by Fire Service Inc. representatives that it may be necessary to interrupt the fire protection service by disconnecting the system and/or s components as the performance of their assigned work.
The undersigned hereby assumes the responsibility for the notification of the authorities at the time the interruption is initiated and will take all of the precautions deemed necessary during the period of interruption and hold harmless Fire Service Inc. and its employees regarding interruption of fire protection service during their service of the equipment.

NAME DATE TIME

SERVICE PERFORMED & REMAINING S/Contract - Procedure Maintenance Smoke Detectors Walk on Floors 9 & 10 / Areas Used Listing - System O.K / Reset properly. - (Points out). -

(A) INACCESSIBLE (B) MISSING (C) DEFECTIVE (D) OTHER

FIRE SERVICE INCORPORATED

27004

Subsidiary of Firecom, Inc.
39-27 Fifty Ninth Street
Woodside, New York 11377
(718) 899-2311

REPORT OF FIELD SERVICE

LOCATIONS | **DEVICES**

INVOICE TO: 7 W T C
New York, N.Y.

FLOOR	Area	Cable	Trans	S/D	Test Clean
7TH	Comm A	1	175	BRK	V
	Elect A	1	175	Edwards	V
	Telep A	1	175	BRK	V
	Pass Elev	1	006	BRK	V
	Freight Elev	1	006	BRK	V
	Comm B	1	175	BRK	V
	Elect B	1	175	BRK	V
	Telep B	1	175	BRK	V
	Comm C	1	174	BRK	V
	Elect C	1	174	BRK	V
	Telep C	1	174	BRK	V
	Comm D	1	174	BRK	V
	Elect D	1	174	BRK	V
	Telep D	1	174	BRK	V
	Core M&E	1	220	Hochiki	V
	Core M&E	1	235	"	V
	Return North D/D	1	234	"	V
	Return South N/A	—	—	—	—
6TH	Pass Elev	1	005	BRK	V
	Freight Elev	1	005	BRK	V
	Comm A	1	172	BRK	V
	Elect A	1	172	BRK	V
	Telep A	1	172	BRK	V
	Comm B	1	172	BRK	V
	Elect B	1	172	BRK	V
	Fan Room Area	1	173	BRK	V
	Fan Room Area	1	173	BRK	V
	Fan Room Area	1	173	BRK	V
	Fan Room D/D	1	231	Hochiki	V
	Fan Room D/D	1	229	Hochiki	V
	Fan Room D/D	1	232	Hochiki	V
	Fan Room D/D	1	233	Hochiki	V

SERVICEMAN ASSIGNED: Frank L. Marcos D.
SEE AT JOB SITE: F.S.D.
DATE SCHEDULED: 08-21-01
CONTRACT #: SC00818
TYPE OF SYSTEM: LSH 2000
FEE SERVICE #:
P.O. #:
CALL AUHTORIZED BY:
PHONE:
EXT:

☒ MAINTENANCE ☒ TEST
☐ JOB COMPLETE ☐ JOB INCOMPLETE
☐ SYSTEM ON LINE ☐ SYSTEM OFF LINE

DEPARTED SHOP	TIME IN	TIME OUT	RETURNED SHOP	TOTAL HOURS
AM PM	8:00 AM PM	4:30 AM PM	AM PM	

MATERIAL RECORD

QUANTITY	DESCRIPTION	COST
	PREVENTIVE MAINTENANCE CONTRACT	

CUSTOMER NAME (PRINT): Sean O'Keeffe.
CUSTOMER SIGNATURE:
SERVICEMAN SIGNATURE: Frank Lewis Marcos Mendez

AUTHORIZATION FOR FIRE ALARM INTERRUPTION
The undersigned has been advised by Fire Service Inc. representative that it may be necessary to interrupt the fire protection service by disconnecting the system and/or a component in the performance of their assigned work.
The undersigned hereby assumes the responsibility for the notification of the authorities at the time the interruption is initiated and will take all of the precautions deemed necessary during the period of interruption and hold harmless Fire Service Inc. and its employees regarding interruption of fire protection service during their service of the equipment.

NAME DATE TIME

SERVICE PERFORMED & REMAINING

Preventive Maintenance
See all Smoke and Heat Detectors located on
7th & 6th floors. Performed Satisfactorily.

(A) INACCESSIBLE (B) MISSING (C) DEFECTIVE (D) OTHER

FIRE SERVICE INCORPORATED

Subsidiary of Firecom, Inc.
39-27 Fifty Ninth Street
Woodside, New York 11377
(718) 899-2311

11840

REPORT OF FIELD SERVICE

LOCATIONS			DEVICES				
FLOOR	Areas			Cards	S/D	Type	Ref. Drwg
8	Elev	Pass		1	BRK	007	
11	Freight	Elev		1	BRK	007	✓
11	Elect	A		1	BRK	177	✓
11	Comm	A		1	BRK	177	✓
	Teleph	A		1	BRK	177	✓
11	Comm	B		1	BRK	177	✓
11	Elect	B		1	BRK	177	✓
11	Teleph	B		1	BRK	177	✓
11	Comm	C		1	BRK	176	✓
11	Elect	C		1	BRK	176	✓
11	Teleph	C		1	BRK	176	✓
11	Comm	D		1	BRK	176	✓
11	Elect	D		1	BRK	176	✓
11	Teleph	D		1	BRK	176	✓
11	Return	D/D North		1	Hochiki	236	✓
11	Return	D/D South		N/A	[redacted]	[redacted]	[redacted]
11	Return	D/D East	(File)	1	Hochiki	236	✓
11	Core	M&E	D/D	1	Hochiki	237	✓
11	Core	M&E	D/D	1	Hochiki	237	✓

Note: Removed & Core BRK Detector on 11th Floor Electrical Closet And Replaced With A New One Alpha Detector Report Made By Jay.

INVOICE TO: TWTC
New York N.Y.

SERVICEMAN ASSIGNED: Frank L. Jay	SEE AT JOB SITE: F.S.D.
	DATE SCHEDULED: 03-20-01
CONTRACT #: Sc00818	TYPE OF SYSTEM: LSN 2000
FEE SERVICE #	P.O. #
CALL AUTHORIZED BY	PHONE / EXT

☑ MAINTENANCE ☑ TEST
☐ JOB COMPLETE ☐ JOB INCOMPLETE
☐ SYSTEM ON LINE ☐ SYSTEM OFF LINE

DEPARTED SHOP	TIME IN	TIME OUT	RETURNED SHOP	TOTAL HOURS
AM PM	8:00 AM PM	4:30 AM PM	AM PM	

MATERIAL RECORD

QUANTITY	DESCRIPTION	COST
	PREVENTIVE MAINTENANCE CONTRACT	

CUSTOMER NAME (PRINT): Sean O'Keefe
CUSTOMER SIGNATURE:
SERVICEMAN SIGNATURE: Frank Jay

AUTHORIZATION FOR FIRE ALARM INTERRUPTION
The undersigned has been advised by Fire Service Inc. representative that it may be necessary to interrupt the fire protection service by disconnecting the system and/or a component in the performance of their assigned work.
The undersigned hereby assumes the responsibility for the notification of the authorities at the time the interruption is initiated and will take all of the precautions deemed necessary during this period of interruption and hold harmless Fire Service Inc. and its employees regarding interruption of fire protection service during their service of the equipment.

NAME _____ DATE _____ TIME _____

SERVICE PERFORMED & REMAINING: Preventive Maintenance
As per contract cleaned and tested elevator lobby detectors, conference and duct smoke detectors on 8th Floor. All devices tested are working properly.
System is operational

(A) INACCESSIBLE (B) MISSING (C) DEFECTIVE (D) OTHER

FIRE SERVICE INCORPORATED

Subsidiary of Firecom, Inc.
39-27 Fifty Ninth Street
Woodside, New York 11377
(718) 899-2311

11839

REPORT OF FIELD SERVICE

LOCATIONS | **DEVICES**

INVOICE TO:
P.W.T.C.
Silverstein Prop.
N.Y.C.

FLOOR	AREA'S			CODE	X/N/R	S/D	TEST
11'	COMM	B		1	182		✓
	ELEC	B		1	182		
	TELEPH	B.		1	182		
	FREIGHT	ELEV.		1	010	BAK	✓
	ELEC	A		1	182		
	COMM	A		1	182		
	TELEPH	A		1	182		
	PASS	ELEV.		1	010		
	COMM	C		1	183		
	ELEC	C		1	183		
	TELEPH	C		1	183		
	TELEPH	D		1	183		
	ELEC	D		1	183		
	COMM	D		1	183		
11'	CORE	MER	D/D	1	243	HONEYWELL	✓
	CORE	MER	D/D	1	243	HONEYWELL	✓
	RETURN	D/D	North	1	242	HONEYWELL	✓
	RETURN	D/D	South	1	242	HONEYWELL	✓
12'	STORE	PNL	AFC 101	(2) PANELS			
	North Side Unit Repaired. – B Room.						
	(12VDC Battery Replaced). – Clear.						
1	B Stair	Polyfoam	(1-12E)	Repaired/Adj.			
	Check O.K. –						

PREVENTIVE MAINTENANCE CONTRACT

SERVICEMAN ASSIGNED: J. Torres / T. Zinger
SEE AT JOB SITE: F.S.D.
DATE SCHEDULED: 3-14-01
CONTRACT #: S/C 00818
TYPE OF SYSTEM: 8500
FEE SERVICE #:
P.O. #:
CALL AUHTORIZED BY:
PHONE:
EXT:

☑ MAINTENANCE ☑ TEST
☐ JOB COMPLETE ☐ JOB INCOMPLETE
☐ SYSTEM ON LINE ☐ SYSTEM OFF LINE

DEPARTED SHOP	TIME IN	TIME OUT	RETURNED SHOP	TOTAL HOURS
AM PM	900 AM PM	430 AM PM	AM PM	

MATERIAL RECORD

QUANTITY	DESCRIPTION	COST
1	12VDC Battery	

CUSTOMER NAME (PRINT): Sean O'Keeffe.
CUSTOMER SIGNATURE:
SERVICEMAN SIGNATURE:

AUTHORIZATION FOR FIRE ALARM INTERRUPTION
The undersigned has been advised by Fire Service Inc. representative that it may be necessary to interrupt the fire protection service by disconnecting the system and/or a component in the performance of their assigned work.
The undersigned hereby assumes the responsibility for the notification of the authorities at the time the interruption is initiated and will take all of the precautions deemed necessary during this period of interruption and hold harmless Fire Service Inc. and its employees regarding interruption of fire protection service during their service of the equipment.

NAME DATE TIME

SERVICE PERFORMED & REMAINING: S/Contract. Drew Maintenance on Smoke Detectors Inside Area Closets on (Listing) on 11' Floor. – Check Repairs on 12' Fl. Store PNL & 1st Fl. Transformer. – System Back/Restored Back to Operation.

(A) INACCESSIBLE (B) MISSING (C) DEFECTIVE (D) OTHER

FIRE SERVICE INCORPORATED

Subsidiary of Firecom, Inc.
39-27 Fifty Ninth Street
Woodside, New York 11377
(718) 899-2311

11838

REPORT OF FIELD SERVICE

LOCATIONS			DEVICES				
FLOOR	AREA			CODE	XTNDR	S/D	TEST
13	ELEV. PASS			1	0192	BLK	✓
	FREIGHT ELEV			1	0132	BLK	✓
	COMM	A-B	(2)	1	186	BLK	✓
	ELECT	A-B	(2)	1	186	BLK	✓
	TELEPH	A-B	(2)	1	186	BLK	✓
	CORE	MEL D/D		1	247	HOCHIKI	✓
	CORE	MEL D/D		1	247	HOCHIKI	✓
	PLENUM	D/D	NORTH	1	246	HOCHIKI	✓
	PLENUM RET	D/D	SOUTH	1	246	HOCHIKI	✓
	COMM	C-D	(2)	1	187	BLK	✓
	ELECT	C-D	(2)	1	187	BLK	✓
	TELEPH	C-D	(2)	1	187	BLK	✓
12	PASS ELEV.			1	011	BLK	✓
	ELECT	A-B	(2)	1	184	BLK	✓
	TELEPH	A-B	(2)	1	184	BLK	✓
	COMM	A-B	(2)	1	184	BLK	✓
	FREIGHT	ELEV		1	011	BLK	✓
	CORE	MEL D/D		1	245	HOCHIKI	✓
*	CORE	MEL D/D	(LED)	1	245	HOCHIKI	✓
	RETURN	D/D	NORTH	1	244	HOCHIKI	✓
	RETURN	D/D	SOUTH	1	244	HOCHIKI	✓
	COMM	C		1	185	BLK	✓
	ELECT	C		1	185	BLK	✓
	TELEPH	C		1	185	BLK	✓
	TELEPH	D		1	185	BLK	✓
	COMM	D		1	185	BLK	✓
	ELECT	D		1	185	BLK	✓

PREVENTIVE MAINTENANCE CONTRACT

INVOICE TO: J.W.T. Co. Silverstein Prop. N.Y.C.

SERVICEMAN ASSIGNED: J. Tolner / F. Rashid	SEE AT JOB SITE: F.S.I
	DATE SCHEDULED: 3-13-01
CONTRACT #: 51000 818	TYPE OF SYSTEM: 8500
FEE SERVICE #	P.O #
CALL AUHTORIZED BY	PHONE / EXT

☒ MAINTENANCE ☒ TEST
☐ JOB COMPLETE ☐ JOB INCOMPLETE
☐ SYSTEM ON LINE ☐ SYSTEM OFF LINE

DEPARTED SHOP	TIME IN	TIME OUT	RETURNED SHOP	TOTAL HOURS
AM PM	8:00 AM PM	4:00 AM PM	AM PM	

MATERIAL RECORD

QUANTITY	DESCRIPTION	COST

CUSTOMER NAME (PRINT): Sean O'Keeffe
CUSTOMER SIGNATURE
SERVICEMAN SIGNATURE

AUTHORIZATION FOR FIRE ALARM INTERRUPTION
The undersigned has been advised by Fire Service Inc. representative that it may be necessary to interrupt the fire protection service by disconnecting the system and/or a component in the performance of their assigned work.
The undersigned hereby assumes the responsibility for the notification of the authorities at the time the interruption is initiated and will take all of the precautions deemed necessary during this period of interruption and hold harmless Fire Service Inc. and its employees regarding interruption of fire protection service during their service of the equipment.

NAME _____ DATE _____ TIME _____ X

SERVICE PERFORMED & REMAINING: Opened (Removed Cleaned) Tested Secured Electrical System Pass-E/Ac Listing Bank Floors 13th & 12th All Alarms. — Sean answered.

*NOTE: Core Mel D/D (L.E.D.) Replaced/Required Unit O.K. 1) Batt.

(A) INACCESSIBLE (B) MISSING (C) DEFECTIVE (D) OTHER

FIRE SERVICE INCORPORATED

Subsidiary of Firecom, Inc.
39-27 Fifty Ninth Street
Woodside, New York 11377
(718) 899-2311

14546

REPORT OF FIELD SERVICE

LOCATIONS | **DEVICES**

FLOOR	AREA'S.			cable	xmtr#	s/d	TST clean
15	PASS/FREIGHT	(2)		1	014	BLK	✓
	COMM.	B-A	(2)	1	190	BLK	✓
	ELECT	B-A	(2)	1	190	BLK	✓
	TELEPH	B-A	(2)	1	190	BLK	✓
	CORE MECH D/D	Supply		1	251	Hochiki	✓
	CORE MECH D/D	Supply		1	251	Hochiki	✓
	COMM	C		1	191	BLK	✓
	ELECT	C		1	191	BLK	✓
	TELEPH	C		1	191	BLK	✓
	TELEPH	D		1	191	BLK	✓
15	COMM	D		1	191	BLK	✓
	ELECT.	D		1	191	BLK	✓
	RETURN	DUCT North		1	250	Hochiki	✓
(A)	-	DUCT South		NO ACCESS	-		-
14	COMM	A-B	(2)	1	189	BLK	✓
	ELECT	A-B	(2)	1	188	BLK	✓
	TELEPH	A-B	(2)	1	188	BLK	✓
	PASS ELEV./FREIGHT		(2)	1	013	BLK	✓
	CORE MECH D/D			1	249	Hochiki	✓
	CORE MECH D/D			1	249	Hochiki	✓
	TELEPH	C		1	189	BLK	✓
	ELECT	C		1	189	BLK	✓
	COMM	C		1	189	BLK	✓
	TELEPH	D		1	189	BLK	✓
	ELECT	D		1	189	BLK	✓
	COMM	D		1	189	BLK	✓
14	RETURN D/D	South		1	248	Hochiki	✓
	"	D/D	North	NO ACCESS	/ As previous		

PREVENTIVE MAINTENANCE CONTRACT

INVOICE TO:
T.W.T.C.
Silverstein Prop.
N.Y.C.

SERVICEMAN ASSIGNED	SEE AT JOB SITE
J. Tower / F. Rosado	F.S.I.
DATE SCHEDULED	3-07-01
CONTRACT #	TYPE OF SYSTEM
s/c00 818	LSN 2000
FEE SERVICE #	P.O. #
CALL AUHTORIZED BY	PHONE / EXT

☒ MAINTENANCE ☒ TEST
☐ JOB COMPLETE ☐ JOB INCOMPLETE
☐ SYSTEM ON LINE ☐ SYSTEM OFF LINE

DEPARTED SHOP	TIME IN	TIME OUT	RETURNED SHOP	TOTAL HOURS
AM PM	800 AM PM	430 PM	AM PM	

MATERIAL RECORD

QUANTITY	DESCRIPTION	COST

CUSTOMER NAME (PRINT) Silverstein
CUSTOMER SIGNATURE
SERVICEMAN SIGNATURE

AUTHORIZATION FOR FIRE ALARM INTERRUPTION
The undersigned has been advised by Fire Service Inc. representative that it may be necessary to interrupt the fire protection service by disconnecting the system and/or a component in the performance of their assigned work.
The undersigned hereby assumes the responsibility for the notification of the authorities at the time the interruption is initiated and will take all of the precautions deemed necessary during this period of interruption and hold harmless Fire Service Inc. and its employees regarding interruption of fire protection service during their service of the equipment.

DATE TIME NAME

SERVICE PERFORMED & REMAINING Service Contract - Preventive Maintenance on Smoke Detectors Check on floors 15th 14th Floor Trees Heat Listed
(A) NOTE: Units on 15th/14th Return Duct Units not accessible / As previous Listed. - BKD Testing System OK/Reseted. -

(A) INACCESSIBLE (B) MISSING (C) DEFECTIVE (D) OTHER

FIRE SERVICE INCORPORATED

22383

Subsidiary of Firecom, Inc.
39-27 Fifty Ninth Street
Woodside, New York 11377
(718) 899-2311

REPORT OF FIELD SERVICE

LOCATIONS | **DEVICES**

INVOICE TO: J.W.T.C.
N.Y.C.

FLOOR	AREAS			CODE	XTNDE	S/D	TEST
17	PASS	ELEV.		1	096	BLK	✓
	ELECT	A		1	197	BLK	✓
	COMM	A		1	197	BLK	✓
	TELEPH	A		1	197	BLK	✓
	COMM	B		1	197	BLK	✓
	TELEPH	B		1	197	BLK	✓
	ELECT	B		1	197	BLK	✓
	CORE	HER.		1	000	HOOKED	✓
	CORE	HER.		1	000	HOOKED	✓
	FREIGHT	ELEV.		1	016	BLK	✓
	ELECT	C		1	196	BLK	✓
	COMM	C		1	196	BLK	✓
	TELEPH	C		1	196	BLK	✓
	COMM	D		1	196	BLK	✓
	ELECT	D		1	196	BLK	✓
	TELEPH	D		1	196	BLK.	✓
(*)	PLENUM RETURN (NO ACCESS SOUTH CEILING) - AS PREVIOUS REPORTED N/A. -						
16	PASS	FREIGHT	(2)	1	015	BLK	✓
	COMM	A-B	(2)	1	193	BLK	✓
	ELECT	A-B	(2)	1	193	BLK	✓
	TELEPH	A-B	(2)	1	193	BLK	✓
	CORE	HER D/D	(1)	1	253	HOOKED	✓
	CORE	HER D/D	(1)	1	253	HOOKED	✓
	COMM	C		1	194	BLK	✓
	ELECT	C		1	194	BLK	✓
	TELEPH	C		1	194	BLK	✓
	TELEPH	D		1	194	BLK	✓
	COMM	D		1	194	BLK	✓
	ELECT	D		1	194	BLK.	✓
	PLENUM RET D/D NORTH.			1	252	HOOKED	✓
(#)	PLENUM RET. D/D SOUTH N/A NO ACCESS SOUTH CEILING AS PREVIOUS REPORTED TO BE. -						

SERVICEMAN ASSIGNED: J. JONES / F. ROSARIO
SEE AT JOB SITE: F.S.I.
DATE SCHEDULED: 3-6-01
CONTRACT #: S/C008 18
TYPE OF SYSTEM: 8500
FEE SERVICE #:
P.O. #:
CALL AUHTORIZED BY:
PHONE:
EXT:

☒ MAINTENANCE ☐ TEST
☐ JOB COMPLETE ☐ JOB INCOMPLETE
☐ SYSTEM ON LINE ☐ SYSTEM OFF LINE

DEPARTED SHOP	TIME IN	TIME OUT	RETURNED SHOP	TOTAL HOURS
8:00 AM PM	9:00 AM PM	4:30 AM PM	AM PM	

MATERIAL RECORD

QUANTITY	DESCRIPTION	COST
	PREVENTIVE MAINTENANCE CONTRACT	

CUSTOMER NAME (PRINT): SILVERSTEIN
CUSTOMER SIGNATURE:
SERVICEMAN SIGNATURE:

AUTHORIZATION FOR FIRE ALARM INTERRUPTION
The undersigned has been advised by Fire Service Inc. representative that it may be necessary to interrupt the fire protection service by disconnecting the system and/or a component in the performance of their assigned work.
The undersigned hereby assumes the responsibility for the notification of the authorities at the time the interruption is initiated and will take all of the precautions deemed necessary during this period of interruption and hold harmless Fire Service Inc. and its employees regarding interruption of the protection service during this service of the equipment.

NAME DATE TIME

SERVICE PERFORMED & REMAINING: TESTING SERVICE ON SMOKE DETECTING UNITS ON FLOORS 17TH & 16TH. ON ALL AREAS (SEE LISTING) - SYSTEM OK / RESETED TO OPERATIONAL. -

* NOTE: 17TH. RETURN UNIT NO ACCESS AS PREVIOUS -
(#) 16TH NO ACCESS SOUTH RETURN UNIT AS PREVIOUS REPORTED. -

(A) INACCESSIBLE (B) MISSING (C) DEFECTIVE (D) OTHER

FIRE SERVICE INCORPORATED

22382

Subsidiary of Firecom, Inc.
39-27 Fifty Ninth Street
Woodside, New York 11377
(718) 899-2311

REPORT OF FIELD SERVICE

LOCATIONS | **DEVICES**

FLOOR	AREA	I/S		TABLE	XTNDR	S/D	TST CLEAN
19	ELEV. LOBBY			1	018	BLK.	✓
	ELECT	B		1	201	BLK	✓
	COMM	B		1	201	BLK	✓
	TELEPH	B		1	201	BLK	✓
	COMM	A		1	201	BLK	✓
	ELECT	A		1	201	BLK	✓
	TELEPH	A		1	201	BLK	✓
	FREIGHT	LOBBY		1	018	BLK	✓
	COMM	C		1	200	BLK.	✓
	ELECT	C		1	200	BLK	✓
	TELEPH	C		1	200	BLK	✓
	ELECT	D		1	200	BLK	✓
	COMM	D		1	200	BLK	✓
	TELEPH	D		1	200	BLK	✓
19	CORE	HGR.	(2) D/D	1	004	HOSTILE	✓
	RETURN	D/D	(2)	1	003	HOSTILE	✓
18	ELECT	A		1	199	BLK	✓
	COMM	A		1	199	BLK	✓
	TELEPH	A		1	199	BLK	✓
	PASS ELEV.			1	017	BLK	✓
	ELECT	B		1	199	BLK	✓
	COMM	B		1	199	BLK	✓
	TELEPH	B		1	199	BLK	✓
	FREIGHT	ELEV.		1	017	BLK	✓
	COMM	C		1	198	BLK	✓
	ELECT	C		1	198	BLK	✓
	TELEPH	C		1	198	BLK	✓
	COMM	D		1	198	BLK	✓
	ELECT	D		1	198	BLK	✓
	TELEPH	D		1	198	BLK.	✓
	RETURN	DUCT	NORTH	1	001	HOSTILE	✓
18	RETURN	DUCT	SOUTH	1	001	HOSTILE	✓
	CORE	HGR	D/D	1	002	HOSTILE	✓
	CORE	HGR	D/D	1	002	HOSTILE	✓

INVOICE TO: T.W.T.C.
SILVERSTEIN PROP.
N.Y.C.

SERVICEMAN ASSIGNED: J. TORRES / F. ROSARIO	SEE AT JOB SITE: F.S.D.
CONTRACT #: S/C 00 818	DATE SCHEDULED: 2-28-01
FEE SERVICE #	TYPE OF SYSTEM: LSN 2000
CALL AUHTORIZED BY	P.O #
☒ MAINTENANCE	PHONE / EXT
☐ JOB COMPLETE	☐ TEST
☐ SYSTEM ON LINE	☐ JOB INCOMPLETE
	☐ SYSTEM OFF LINE

AUTHORIZATION FOR FIRE ALARM INTERRUPTION
The undersigned has been advised by Fire Service Inc. representative that it may be necessary to interrupt the fire protection service by disconnecting the system and/or a component in the performance of their assigned work.
The undersigned hereby assumes the responsibility for the reinstatement of the extinguisher at the time the interruption is initiated and will take all of the precautions deemed necessary during this period of interruption and hold harmless Fire Service Inc. and its employees regarding interruption of fire protection service during this service of the equipment.

NAME / DATE / TIME

DEPARTED SHOP	TIME IN	TIME OUT	RETURNED SHOP	TOTAL HOURS
AM PM	8:00 AM PM	4:30 AM PM	AM PM	

MATERIAL RECORD

QUANTITY	DESCRIPTION	COST
	PREVENTIVE MAINTENANCE CONTRACT	

CUSTOMER NAME (PRINT): SILVERSTEIN
CUSTOMER SIGNATURE:
SERVICEMAN SIGNATURE: J. Torres / F. Rosario

SERVICE PERFORMED & REMAINING: S/ CONTRACT - P/M (MAINTENANCE ON SMOKE DETECTORS CLASS E SYSTEM ON FREIGHT ELEVATORS 19 & 18 FL. ON LISTED ABOVE SYSTEM CHECKED FUNCTIONS OUTPUTS &

(A) INACCESSIBLE (B) MISSING (C) DEFECTIVE (D) OTHER

FIRE SERVICE INCORPORATED

22381

Subsidiary of Firecom, Inc.
39-27 Fifty Ninth Street
Woodside, New York 11377
(718) 899-2311

REPORT OF FIELD SERVICE

LOCATIONS | **DEVICES**

INVOICE TO: 7TH W.T.C. / SILVERSTEIN PROPERTIES / N.Y.C.

FLOOR	AREA'S			CODE	XMTR	TST & CLEAN	S/D
21	PASS ELEV.			1	020	✓	BLK
	FREIGHT ELEV.			1	020	✓	BLK
	COMM	A		1	207	✓	BLK
	TELEPH	A		1	207	✓	BLK
	ELECT	A		1	209	✓	BLK
	ELECT	B		1	204	✓	BLK
	COMM	B		1	204	✓	BLK
	TELEPH	B		1	204	✓	BLK
	ELECT	C		1	205	✓	BLK
	COMM	C		1	205	✓	BLK
	TELEPH	C		1	205	✓	BLK
	CORE	MER	Supply Duct	1	008	✓	Hochiki
	CORE	MER	Supply Duct	1	008	✓	Hochiki
	TELEPH	D		1	206	✓	BLK
	ELECT	D		1	206	✓	BLK
	COMM	D		1	206	✓	BLK.
21	RETURN	DUCT	North	1	007	✓	Hochiki
	RETURN	DUCT	South	1	007	✓	Hochiki
20th	COMM	A		1	203	✓	BLK
	ELECT	A		1	203	✓	BLK
	TELEPH	A		1	203	✓	BLK
	ELECT	B		1	203	✓	BLK
	COMM	B		1	203	✓	BLK
	TELEPH	B		1	203	✓	BLK
	TELEPH	C		1	202	✓	BLK
	COMM	C		1	202	✓	BLK
	ELECT	C		1	202	✓	BLK.
	PASS ELEV.			1	019	✓	BLK
	FREIGHT	ELEV.		1	019	✓	BLK
	ELECT	D		1	202	✓	BLK
	COMM	D		1	202	✓	BLK
	TELEPH	D		1	202	✓	BLK
	CORE	MER	DUCT (2)	1	006	✓	Hochiki
	RETURN	DUCT	NORTH	1	005		
20	RETURN	DUCT	SOUTH	1	005	✓	
	RETURN	DUCT	N.E.	3	045	✓	Hochiki

SERVICEMAN ASSIGNED: J. TOLLEY / F. ROSARIO

SEE AT JOB SITE: F.S.I.

DATE SCHEDULED: 2-27-01

CONTRACT #: SC00 818

TYPE OF SYSTEM: LSN 2000

FEE SERVICE #:

P.O. #:

CALL AUHTORIZED BY | PHONE | EXT

☒ MAINTENANCE ☒ TEST

☐ JOB COMPLETE ☐ JOB INCOMPLETE

☐ SYSTEM ON LINE ☐ SYSTEM OFF LINE

DEPARTED SHOP	TIME IN	TIME OUT	RETURNED SHOP	TOTAL HOURS
AM PM	800 AM PM	430 AM PM	AM PM	

MATERIAL RECORD

QUANTITY	DESCRIPTION	COST
	PREVENTIVE MAINTENANCE CONTRACT	

CUSTOMER NAME (PRINT): SILVERSTEIN

CUSTOMER SIGNATURE:

SERVICEMAN SIGNATURE: J. Tolley / F. Rosario

AUTHORIZATION FOR FIRE ALARM INTERRUPTION
The undersigned has been advised by Fire Service Inc. representatives that it may be necessary to interrupt the fire protection service by disconnecting the system and/or a component in the performance of their assigned work.
The undersigned hereby assumes the responsibility for the notification of the authorities at the time the interruption is initiated and will take all of the precautions deemed necessary during this period of interruption and hold harmless Fire Service Inc. and its employees regarding interruption of fire protection service during their service of the equipment.

NAME _____ DATE _____ TIME _____

SERVICE PERFORMED & REMAINING:

S/ CONTRACT / PREVENTIVE MAINTENANCE ON SMOKE DETECTOR UNITS ON FLOORS 21st / 20th AREAS / CLOSETS AS LISTED ABOVE - SYSTEM ALL FUNCTIONS / PRINT OUT. - O.K.

(A) INACCESSIBLE (B) MISSING (C) DEFECTIVE (D) OTHER

FIRE SERVICE INCORPORATED

22380

Subsidiary of Firecom, Inc.
39-27 Fifty Ninth Street
Woodside, New York 11377
(718) 899-2311

REPORT OF FIELD SERVICE

LOCATIONS | **DEVICES**

FLOOR	ALM'S	HEET'S		CABLE	XT/NDR	TST	S/O
22	ELEV.	S/D.		1	021	✓	~~2W3~~ (DF-5)
	ELEC	'C'		1	206	✓	BRK.
	COMM	C		1	206	✓	BRK
	TELEPH	C		1	206	✓	BRK
	TELEPH	'D'		1	206	✓	BRK
	COMM	'D'		1	206	✓	BRK.
	ELEC	'D'		1	206	✓	BLK
22	ELEC	'A'		1	207	✓	BLK
	COMM	'A'		1	207	✓	BLK
	TELEPH	'A'		1	207	✓	BLK
	COMM	'B'		1	207	✓	BLK
	ELEC	'B'		1	207	✓	BLK
	TELEPH	'B'		1	207	✓	BLK
	CORE	HDR D/DET		1	010	✓	HOOKKI
	CORE	HDR D/D.		1	010	✓	HOOKKI
	RETURN	D/D. SOUTH		1	009	✓	HOOKKI
	RETURN	D/D. NORTH.		1	009		HOOKKI
22	FREIGHT	ELEC.		1	021	✓	BRK.
11	SPEAKER	PAGE - (3)	CKTS OUT	/ REPAIRED			
	CLEARING	FOR EXISTING	FIRE	-			
	TESTED	UNIT/FIBER	O.K.	-			

INVOICE TO: W.T.C. (Silverstein) (DF-5) N.Y.C.

Mr. J. Carrigan

SERVICEMAN ASSIGNED: J. Jones / L. Rosario	SEE AT JOB SITE: F.S.D.
	DATE SCHEDULED: 2-21-01
CONTRACT #: S/C 00818	TYPE OF SYSTEM: LSN 2000
FEE SERVICE #	P.O. #
CALL AUHTORIZED BY	PHONE / EXT

☒ MAINTENANCE ☐ TEST

☐ JOB COMPLETE ☐ JOB INCOMPLETE

☐ SYSTEM ON LINE ☐ SYSTEM OFF LINE

DEPARTED SHOP	TIME IN	TIME OUT	RETURNED SHOP	TOTAL HOURS
AM / PM	800 AM / PM	430 AM / PM	AM / PM	

MATERIAL RECORD

QUANTITY	DESCRIPTION	COST
	PREVENTIVE MAINTENANCE CONTRACT	

CUSTOMER NAME (PRINT): SILVERSTEIN

CUSTOMER SIGNATURE:

SERVICEMAN SIGNATURE: J. Jones

AUTHORIZATION FOR FIRE ALARM INTERRUPTION
The undersigned has been advised by Fire Service Inc. representative that it may be necessary to interrupt the fire protection service by disconnecting the system and/or a component in the performance of their assigned work.
The undersigned hereby assumes the responsibility for the consequences of the authorities at the time the interruption is initiated and will take all of the precautions deemed necessary during this period of interruption and hold harmless Fire Service Inc. and its employees repairing interruption of fire protection service during their service of the equipment.

NAME DATE TIME

SERVICE PERFORMED & REMAINING: S/Control - Repair - On Site Test. - 22nd Fl. S/Peripheral Testing & Record Sequence Confirmation Preventive Maintenance Also Check Repairs on Audio Speaker's Page on 11th Fl. (3) Ckts N/G. - 12th Fl. Wiring Corrected Unit Test O.K. - (As per Required Repair).

(A) INACCESSIBLE (B) MISSING (C) DEFECTIVE (D) OTHER

FIRE SERVICE INCORPORATED

22379

Subsidiary of Firecom, Inc.
39-27 Fifty Ninth Street
Woodside, New York 11377
(718) 899-2311

REPORT OF FIELD SERVICE

W/STA — SPRINKLERS

LOCATIONS | **DEVICES**

FLOOR			CABLE	XMTR	TST	STR'S	UNITS
6	H.E.R.		1	338	✓	O.K	1
	H.E.R-H.V.		1	338	✓		1
	ENG. RAN'T		1	335	✓		1
	HALLWAY		1	317	✓		1
5	Hallway/Freight		1	336	✓	OK	1
	Switch Gear H.V.		1	336	✓		1
	H.E.R. NORTH.			337	✓		1
	H.E.R. SOUTH			337	✓		1
	H.E.R N.W.			316	✓		1
4	AREA 'B' EXIT			315	✓	OK.	1
3	RAN T. F.S.D. OFFICE			314	✓	OK.	1
2	H.E.R WEST			534	✓	OK	1
2	TEIF/RAISE RM			334	✓		1
2	'A' EXIT			313	✓		1
1	PUMP RM			341	✓	OK.	1
⊕ 1	ENTRANCE CONSOLE			N/G-	OUT	SERVICE	1
	GROUND/POWER WIRING TO SPRINKLER BEATTY F.S.D. NOTIFIER —						

INVOICE TO: J.W.T.C.

N.Y.C.

SERVICEMAN ASSIGNED	SEE AT JOB SITE
J. Torres / F. Rosario	F.S.D.
CONTRACT #	DATE SCHEDULED
SK00 818	2-20-01
FEE SERVICE #	TYPE OF SYSTEM
	CSN 2000
CALL AUHTORIZED BY	P.O. #
	PHONE / EXT

☒ MAINTENANCE ☐ TEST

☐ JOB COMPLETE ☐ JOB INCOMPLETE

☐ SYSTEM ON LINE ☐ SYSTEM OFF LINE

DEPARTED SHOP	TIME IN	TIME OUT	RETURNED SHOP	TOTAL HOURS
800 AM/PM	900 AM/PM	930 AM/PM	AM/PM	

MATERIAL RECORD

QUANTITY	DESCRIPTION	COST
	PREVENTIVE MAINTENANCE CONTRACT	

CUSTOMER NAME (PRINT) SILVERSTEIN.

CUSTOMER SIGNATURE

SERVICEMAN SIGNATURE

AUTHORIZATION FOR FIRE ALARM INTERRUPTION
The undersigned has been advised by Fire Service Inc. representative that it may be necessary to interrupt the fire protection service by disconnecting the system and/or a component in the performance of their assigned work.
The undersigned hereby assumes the responsibility for the notification of the authorities at the time the interruption is initiated and will take all of the precautions deemed necessary during the period of interruption and hold harmless Fire Service Inc. and its employees regarding interruption of the protection service during their service of the equipment.

NAME DATE TIME

SERVICE PERFORMED & REMAINING

S/ CONTRACT — CHECK / TEST FOR OPERATIONS ON COMMUNICATIONS / AUTO FIRE SYSTEM ADJ: WARDEN'S PHONES STATIONS & SPEAKER'S PAGE ON ALL FLOORS MADE LISTING FLOOR'S COMPANY. —

(A) INACCESSIBLE (B) MISSING (C) DEFECTIVE (D) OTHER

FIRE SERVICE INCORPORATED

22378

Subsidiary of Firecom, Inc.
39-27 Fifty Ninth Street
Woodside, New York 11377
(718) 899-2311

REPORT OF FIELD SERVICE

LOCATIONS | **DEVICES**

FLOOR				S/D		Cable
25	Elect	B		BRK		2
	Comm	B		"		"
	Tele	B		"		"
	Pass	Elev		"		"
	Freight	Elev		Edwards		2
	Comm	A		BRK		"
	Elect	A		"		"
	Tele	A		"		"
	Elec	C		"		"
	Comm	C		"		2
	Tele	C		"		"
	Tele	D		"		"
	Elect	D		"		"
	Comm	D		"		"
	Return	D/D	North	Hochiki		"
	Return	D/D	South	Hochiki		2
	Core	MER	D/D	Hochiki		"
	Core	MER	D/D	Hochiki		"
24	Elev	Lobby	Pass	BRK		2
	Elev	Lobby	Freight	BRK		"
	Comm	A		"		"
	Elect	A		"		"
	Tele	A		"		"
	Comm	B		"		"
	Elect	B		"		2
	Tele	B		BRK		"
	Comm	C		"		"
	Elect	C		"		"
	Tele	C		"		"
	Comm	D		"		"
	Elect	D		"		"
	Tele	D		"		"
	Return	D/D	North + South	Hochiki		"
	Core	MER	D/D	North + South	Hochiki	"

INVOICE TO: 7WTC
N.Y., N.Y.

SERVICEMAN ASSIGNED: Frank R. / Tom White	SEE AT JOB SITE: F.S.D
	DATE SCHEDULED: 02-14-01
CONTRACT #: S000818	TYPE OF SYSTEM: LSM 2000
FEE SERVICE #	P.O. #
CALL AUHTORIZED BY	PHONE / EXT
☑ MAINTENANCE	☑ TEST
☐ JOB COMPLETE	☐ JOB INCOMPLETE
☐ SYSTEM ON LINE	☐ SYSTEM OFF LINE

DEPARTED SHOP	TIME IN	TIME OUT	RETURNED SHOP	TOTAL HOURS
AM / PM	8:00 AM / PM	4:30 AM / PM	AM / PM	

MATERIAL RECORD

QUANTITY	DESCRIPTION	COST
	PREVENTIVE MAINTENANCE CONTRACT	

CUSTOMER NAME (PRINT): Sean O'Keefe
CUSTOMER SIGNATURE:
SERVICEMAN SIGNATURE: Frank Lorino / Thomas White

AUTHORIZATION FOR FIRE ALARM INTERRUPTION
The undersigned has been advised by Fire Service Inc. representative that it may be necessary to interrupt the fire protection service by disconnecting the system and/or a component in the performance of their assigned work.
The undersigned hereby assumes the responsibility for the notification of the authorities at the time the interruption is initiated and will take all of the precautions deemed necessary during this period of interruption and hold harmless Fire Service Inc. and its employees regarding interruption of fire protection service during their service of the equipment.

NAME _____ DATE _____ TIME _____

SERVICE PERFORMED & REMAINING

Contract Prevention Maintenance tested and cleaned all Smoke and Heat Detectors on the 25th and 24th Floors, found that every Unit Working Properly, System back to Normal Operation.

(A) INACCESSIBLE (B) MISSING (C) DEFECTIVE (D) OTHER

FIRE SERVICE INCORPORATED

27009

Subsidiary of Firecom, Inc.
39-27 Fifty Ninth Street
Woodside, New York 11377
(718) 899-2311

REPORT OF FIELD SERVICE

LOCATIONS	DEVICES		
FLOOR		WARDEN PHONES	SPEAKERS
25th		✓	✓
24th		✓	✓
23rd		✓	✓
21st		✓	✓
20th		✓	✓
19th		✓	✓
18th		✓	✓
17th		✓	✓
16th		✓	✓
15th		✓	✓
14th		✓	✓
13th		✓	✓
12th		✓	✓
11th		✓	✓ * HORNS (N-S) BY STAIRS A + B.
8th		✓	✓
7th		✓	✓

INVOICE TO: #7 World Trade Center N.Y.C., N.Y.

SERVICEMAN ASSIGNED (I) Clifton Barclay (II) Frank Rosario (III) Tom White	SEE AT JOB SITE F.S.D.
	DATE SCHEDULED 13th FEB, 2001
CONTRACT # SC00818	TYPE OF SYSTEM ESN 2000.
FEE SERVICE # -	P.O. #
CALL AUHTORIZED BY Shop.	PHONE ✓ EXT
☑ MAINTENANCE	☑ TEST
☐ JOB COMPLETE	☐ JOB INCOMPLETE
☐ SYSTEM ON LINE	☐ SYSTEM OFF LINE

AUTHORIZATION FOR FIRE ALARM INTERRUPTION
The undersigned has been advised by Fire Service Inc representative that it may be necessary to interrupt the fire protection service by disconnecting the system and/or a component in the performance of their assigned work.
The undersigned hereby assumes the responsibility for the notification of the authorities at the time the interruption is initiated and will take all of the precautions deemed necessary during this period of interruption and hold harmless Fire Service Inc. and its employees regarding interruption of the protection service during their service of the equipment.

TIME / DATE / NAME

DEPARTED SHOP	TIME IN	TIME OUT	RETURNED SHOP	TOTAL HOURS
11:30 AM PM	12:00 AM PM	4:30 AM PM	AM PM	

MATERIAL RECORD

QUANTITY	DESCRIPTION	COST
	PREVENTIVE MAINTENANCE CONTRACT	

CUSTOMER NAME (PRINT) Sean O'Keeffe

CUSTOMER SIGNATURE

SERVICEMAN SIGNATURE Clifton Barclay

SERVICE PERFORMED & REMAINING: Performed service - Contract of Bldg Class-"E" Warden Phones and Floor-Page Speakers from 25th floor down through 7th floor. Found (1) problem — Horns - By Stair 'A' and Stair 'B' are NOT operating. All other devices tested are operating properly. RESTORED system back to normal operation.

(A) INACCESSIBLE (B) MISSING (C) DEFECTIVE (D) OTHER

FIRE SERVICE INCORPORATED

22375

Subsidiary of Firecom, Inc.
39-27 Fifty Ninth Street
Woodside, New York 11377
(718) 899-2311

REPORT OF FIELD SERVICE

EXITS — LOCATIONS | MANUAL STATIONS — DEVICES

FLOOR	A	B	C		H/STA		UNITS
48	147	147			✓		2
47	080	081	082		✓		3
47	FITNESS CENTER			084	✓		1
46	079	078			✓		2
45	076	077			✓		2
44	074	075			✓		2
43	072	073			✓		2
42	071	070			✓		2
41	068	069			✓		2
40	067	066			✓		2
39	065	064	193		✓		3
39	AVIDITH EXIT 194				✓		2
38	062	063	192		✓		3
37	060	061	145		✓		3
36	058	059	144		✓		3
35	056	057	195		✓		3
34	054	055			✓		2
33	051	050			✓		2
31	048	049			✓		2
30	046	047			✓		2
29	044	045			✓		2
28	042	043			✓		2
27	040	041			✓		2
27	040	EAST CORRIDOR			✓		1
26	038	039			✓		2
26	038	EAST CORRIDOR			✓		1
5	N/A				—		
4	033	034			✓		2
4	EASTHAM 202/ESCALATOR				✓		3
3	029	030	S.E 032 · SW031		✓		4
3	N.W. ENTRANCE/BOAT MAN/CONF. EAST				✓	201	3

INVOICE TO:
7 W.T.C.
(Solomon Smith Barney)
N.Y.C.

SERVICEMAN ASSIGNED: L. TOLLES / F. ROSARIO	SEE AT JOB SITE: F-S-7
	DATE SCHEDULED: 2-07-01
CONTRACT #: S/00 818	TYPE OF SYSTEM: LSN 2000
FEE SERVICE #	P.O. #
CALL AUHTORIZED BY	PHONE / EXT
☒ MAINTENANCE	☒ TEST
☐ JOB COMPLETE	☐ JOB INCOMPLETE
☐ SYSTEM ON LINE	☐ SYSTEM OFF LINE

DEPARTED SHOP	TIME IN	TIME OUT	RETURNED SHOP	TOTAL HOURS
AM PM	800 AM PM	430 AM PM	AM PM	

MATERIAL RECORD

QUANTITY	DESCRIPTION	COST
	PREVENTIVE MAINTENANCE CONTRACT	

CUSTOMER NAME (PRINT): Sean O'Keeffe.
CUSTOMER SIGNATURE:
SERVICEMAN SIGNATURE:

AUTHORIZATION FOR FIRE ALARM INTERRUPTION
The undersigned has been advised by Fire Service Inc. representative that it may be necessary to interrupt the fire protection service by disconnecting the system and/or a component in the performance of their assigned work.
The undersigned hereby assumes the responsibility for the consequences of the subscribers at the time the interruption is initiated and will take all of the precautions deemed necessary during the period of interruption and hold harmless Fire Service Inc. and its employees regarding interruption of the protection service during their service of the equipment.

TIME
DATE
NAME

SERVICE PERFORMED & REMAINING Floor	A	B	TST	UNITS
2	027	028	✓	2
1	S.E. DOOR 024		✓	1
1	S.W. DR 025		✓	1
1	LOADING POST 026		✓	1

PREV. MAINT. SERVICE CONTRACT.
TEST ACTIVATION & MANUAL @ ALL STATIONS
ON FLOORS (LISTED) 48 EA. 12 EA. -
ANNUNCIATORS / ALARM, ACK / RESET, FC STA. -
(PRINT OUT ATTACH.) -

(A) INACCESSIBLE (B) MISSING (C) DEFECTIVE (D) OTHER

FIRE SERVICE INCORPORATED

22374

Subsidiary of Firecom, Inc.
39-27 Fifty Ninth Street
Woodside, New York 11377
(718) 899-2311

REPORT OF FIELD SERVICE

LOCATIONS | **DEVICES**

FLOOR	STAIR	EXIT		CODE	M/STA	TST
25		A		2	036	✓
25		B		2	037	✓
24		A		2	034	✓
24		B		2	035	✓
23		A		2	032	✓
23		B		2	033	✓✓
22		A		2	070	✓
22		B		2	071	✓
21		A		2	068	✓
21		B		2	069	✓
20		A		2	066	✓
20		B		2	067	✓
19		A		2	064	✓
19		B		2	065	✓
18		A		2	062	✓
18		B		2	063	✓
17		A		2	060	✓
17		B		2	061	✓
16		A		2	058	✓
16		B		2	059	✓
15		A		2	056	✓
15		B		2	057	✓
14		A		2	054	✓
14		B		2	055	✓
13		A		2	052	✓
13		B		2	053	✓
12		A		1	050	✓
12		B		1	051	✓
11		A		1	048	✓
11		B		1	049	✓
10		A		1	046	✓
10		B		1	047	✓
9		A		1	044	✓
9		B		1	045	✓
8		A		1	042	X AN. 6-2.
8		B		1	043	✓ PREV. MAINT. & SERVICE (METAL) ✓.
7		A		1	040	✓ FEB / ACTIVATION MANUAL PULL STATIONS
7		B		1	041	✓ ON ERROR (BASIC LISTED). — 25/6" FL.
6		A		1	038	✓ by EQUIP. TO STAIRS A+B. — ANNUNCIATOR
6		B		1	039	✓ DRAWN / DOOR / KEYED AT F.C. STA. — (PRINT OUT BOOK). —

SERVICE PERFORMED & REMAINING

INVOICE TO:
W.F.C
Silverstein Prop. —
N.Y.C.

SERVICEMAN ASSIGNED: J. Torres / A. Ellger	SEE AT JOB SITE: F.S.D.
	DATE SCHEDULED: 2-06-01
CONTRACT #: 5/C00 818	TYPE OF SYSTEM: CSN2000
FEE SERVICE #	P.O #
CALL AUHTORIZED BY	PHONE / EXT

☒ MAINTENANCE ☒ TEST
☐ JOB COMPLETE ☐ JOB INCOMPLETE
☐ SYSTEM ON LINE ☐ SYSTEM OFF LINE

DEPARTED SHOP	TIME IN	TIME OUT	RETURNED SHOP	TOTAL HOURS
AM PM	800 AM PM	430 AM PM	AM PM	

MATERIAL RECORD

QUANTITY	DESCRIPTION	COST
	PREVENTIVE MAINTENANCE CONTRACT	

CUSTOMER NAME (PRINT): Sean O'Keeffe.
CUSTOMER SIGNATURE
SERVICEMAN SIGNATURE

AUTHORIZATION FOR FIRE ALARM INTERRUPTION
The undersigned has been advised by Fire Service Inc. representative that it may be necessary to interrupt the fire protection service by disconnecting the system and/or a component in the performance of their assigned work.
The undersigned hereby assumes the responsibility for the notification of the authorities at the time the interruption is initiated and will take all of the precautions deemed necessary during this period of interruption and hold harmless Fire Service Inc. and its employees regarding interruption of fire protection service during their service of the equipment.

TIME
DATE
NAME

(A) INACCESSIBLE (B) MISSING (C) DEFECTIVE (D) OTHER

FIRE SERVICE INCORPORATED

22373

Subsidiary of Firecom, Inc.
39-27 Fifty Ninth Street
Woodside, New York 11377
(718) 899-2311

REPORT OF FIELD SERVICE

LOCATIONS			DEVICES				
FLOOR				THPRS		W/FL.	TST. & CLEAN
35	STAIR	'B'	RISER	2-132		2-100	✓
34	STAIR	'B'	RISER	2-131		2-099	✓
33	STAIR	'B'	RISER	2-130		2-098	✓
32	STAIR	'B'	RISER	2-129		2-097	✓
31	STAIR	'B'	RISER	2-128		2-096	✓
30	STAIR	'B'	RISER	2-127		2-095	✓
29	STAIR	'B'	RISER	2-126		2-094	✓
28	STAIR	'B'	RISER	2-125		2-093	✓
27	STAIR	'B'	RISER	2-124		2-092	✓
26	STAIR	'B'	RISER	2-123		2-091	✓
G	PUMP	RM.		2-113			
G	"	"		2-115			
G	"	"		2-116			
G	"	"		2-118			
G	"	"		2-117			
G	"	"		2-119			
G	"	"		2-120			
G	"	"		2-121			
G	"	"		2-122			
G	"	"		2-124			
G	COMPRESSOR	RM.		2-157			

INVOICE TO: T.W.T.C.
H.Y.C.
J. CARLIGAN

SERVICEMAN ASSIGNED: J. TORRES / F. ROSALIO	SEE AT JOB SITE: F.S.D.
CONTRACT #: S/C 00 818	DATE SCHEDULED: 1-31-01
FEE SERVICE #	TYPE OF SYSTEM: LSN 2000
CALL AUHTORIZED BY	P.O. #
PHONE	EXT

☐ MAINTENANCE ☑ TEST
☐ JOB COMPLETE ☐ JOB INCOMPLETE
☐ SYSTEM ON LINE ☐ SYSTEM OFF LINE

DEPARTED SHOP	TIME IN	TIME OUT	RETURNED SHOP	TOTAL HOURS
800 AM PM	900 AM PM	430 AM PM	AM PM	

MATERIAL RECORD

QUANTITY	DESCRIPTION	COST
	PREVENTIVE MAINTENANCE CONTRACT	

CUSTOMER NAME (PRINT): Sean O'Keeffe
CUSTOMER SIGNATURE:
SERVICEMAN SIGNATURE:

AUTHORIZATION FOR FIRE ALARM INTERRUPTION
The undersigned has been advised by Fire Service Inc. representative that it may be necessary to interrupt the fire protection service by disconnecting the system and/or a component in the performance of their assigned work.
The undersigned hereby assumes the responsibility for the notification of the authorities at the time the interruption is initiated and will take all of the precautions deemed necessary during this period of interruption and hold harmless Fire Service Inc. and its employees regarding interruption of fire protection service during their service of the equipment.

TIME
DATE
NAME

SERVICE PERFORMED & REMAINING: SERVICE CONTRACT - PREV. MAINTENANCE CHECK TEST / WATERFLOW S/W & TAMPER'S ON STANDPIPE RISER 'B' STAIRCASE. - ON ROOF ABOVE LISTED (PAINT NOT AVAILABLE). - SYSTEM FIRE COMMAND UNIT ACKNOWLEDGE) ALARM / TROUBLE / SIGNALS. - SEE ABOVE. - COMPLETE. -

(A) INACCESSIBLE (B) MISSING (C) DEFECTIVE (D) OTHER

FIRE SERVICE INCORPORATED

22372

Subsidiary of Firecom, Inc.
39-27 Fifty Ninth Street
Woodside, New York 11377
(718) 899-2311

REPORT OF FIELD SERVICE

LOCATIONS			DEVICES			
FLOOR			TAMPS		W/F.	TSI CHECK
47	STAIR 'B' Riser		2-155		2-112	✓
46	WATER TANK Rm		2.148			
	"	"	2.149			
	"	"	2.150			
	"	"	2.151			
	"	"	2.152			
	"	"	2.153			
46	STAIR 'B' Riser		2.154		2.111	✓
45	STAIR 'B' Riser		2.147		2.110	✓
44	"	"	2.142		2.109	✓
44	"	"	2.146			
43	"	"	2-140		2.108	✓
42	"	"	2.139		2.107	✓
41	STAIR 'B' Riser		2.138		2.106	✓
40	"	"	2.137		2.105	✓
39	"	"	2.136		2.104	✓
38	"	"	2.135		2.103	✓
37	"	"	2.134		2.102	✓
36	STAIR 'B' Riser		2.133		2.101	✓

PREVENTIVE MAINTENANCE CONTRACT

INVOICE TO: 7 W.T.C
N.Y.C
M. J. CARRIGAN

SERVICEMAN ASSIGNED: J. TORRES / F. ROSARIO	SEE AT JOB SITE: F.S.I.
	DATE SCHEDULED: 1-30-01
CONTRACT #: S/C00 818	TYPE OF SYSTEM: LSH 2000
FEE SERVICE #	P.O. #
CALL AUTHORIZED BY	PHONE / EXT

☒ MAINTENANCE ☐ TEST
☐ JOB COMPLETE ☐ JOB INCOMPLETE
☐ SYSTEM ON LINE ☐ SYSTEM OFF LINE

DEPARTED SHOP	TIME IN	TIME OUT	RETURNED SHOP	TOTAL HOURS
AM PM	8AM PM	4:30 AM PM	AM PM	

MATERIAL RECORD

QUANTITY	DESCRIPTION	COST

CUSTOMER NAME (PRINT): Sean O'Leaffe
CUSTOMER SIGNATURE
SERVICEMAN SIGNATURE

AUTHORIZATION FOR FIRE ALARM INTERRUPTION
The undersigned has been advised by Fire Service Inc. representative that it may be necessary to interrupt the fire protection service by disconnecting the system and/or a component in the performance of their assigned work.
The undersigned hereby assumes the responsibility for the notification of the authorities at the time the interruption is initiated and will take all of the precautions deemed necessary during this period of interruption and hold harmless Fire Service Inc. and its employees regarding interruption of fire protection service during their service of the equipment.

NAME DATE TIME

SERVICE PERFORMED & REMAINING: SERVICE CONTRACT. YEAR 2001 / WELDS / HANGERS / SWITCHES / CHECK TEST ALARMS / RESET TO FIRE PANEL UNIT. ACKNOWLEDGE / RESET - (PRINT OUT DEVICES). - SEE BOOK USE FLOORS 47 TO 36TH - TO BE CONTINUE

(A) INACCESSIBLE (B) MISSING (C) DEFECTIVE (D) OTHER

FIRE SERVICE INCORPORATED

22212

Subsidiary of Firecom, Inc.
39-27 Fifty Ninth Street
Woodside, New York 11377
(718) 899-2311

REPORT OF FIELD SERVICE

LOCATIONS | **DEVICES**

FLOOR	B	RISER	CABLE	TAMPR	CABLE	W/F	
25	B	"	2	122	2	090	
24	B	"	2	121	2	089	
23	B	"	2	120	2	088	
22	B	"	1	150	1	103	
21	B	"	1	149	1	102	
20	B	"	1	143	1	101	
20	B	"	1	144	—	—	
20	B	"	1	145	—	—	
20	B	"	1	146	—	—	
19	B	RISER	1	142	1	100	
18	B	"	1	141	1	099	
17	B	"	1	140	1	098	
16	B	"	1	139	1	097	
15	B	"	1	138	1	096	
14	B	"	1	137	1	095	
13	B	"	1	136	1	094	
12	B	"	1	135	1	093	
11	B	"	1	134	1	092	
10	B	RISER	1	133	1	091	
9	B	*	1	132(C)	1	090	
8	B		1	131	1	089	
7	B		1	130	1	087	

INVOICE TO:
T.W.T.C.
N.Y.C.
Mr. J. Culligan

SERVICEMAN ASSIGNED: J. Torres / F. Rosario	SEE AT JOB SITE: F.S.I.
CONTRACT #: 3/c 00 818	DATE SCHEDULED: 1-24-01
FEE SERVICE #	TYPE OF SYSTEM: LSN 2000
CALL AUTHORIZED BY	PO #
PHONE	EXT

☒ MAINTENANCE ☒ TEST
☐ JOB COMPLETE ☐ JOB INCOMPLETE
☐ SYSTEM ON LINE ☐ SYSTEM OFF LINE

DEPARTED SHOP	TIME IN	TIME OUT	RETURNED SHOP	TOTAL HOURS
AM PM	800 AM PM	430 AM PM	AM PM	

MATERIAL RECORD

QUANTITY	DESCRIPTION	COST
	PREVENTIVE MAINTENANCE CONTRACT	

CUSTOMER NAME (PRINT): SILVERSTEIN
CUSTOMER SIGNATURE
SERVICEMAN SIGNATURE

AUTHORIZATION FOR FIRE ALARM INTERRUPTION
The undersigned has been advised by Fire Service Inc. representative that it may be necessary to interrupt the fire protection service by disconnecting the system and/or a component in the performance of their assigned work.
The undersigned hereby assumes the responsibility for the notification of the authorities at the time the interruption is initiated and will take all of the precautions deemed necessary during this period of interruption and hold harmless Fire Service Inc. and its employees regarding interruption of fire protection service during their service of the equipment.

NAME DATE TIME

SERVICE PERFORMED & REMAINING: SERVICE CONTRACT - YEAR 2001 / TESTED ACTIVATION OF ALARM'S / REPEAT'S ON TAMPER'S / WATERFLOW'S S/W ON (LISTED ABOVE) FLOOR'S 25 TO 7". NOTE: 9" AP TAMPER S/W TO CHECK / ADJUSTMENT MAY NEEDED TO FOLLOW UP - CONTACT TEST. - POINT OUT POSSIBLE.

(A) INACCESSIBLE (B) MISSING (C) DEFECTIVE (D) OTHER

FIRE SERVICE INCORPORATED

22211

Subsidiary of Firecom, Inc.
39-27 Fifty Ninth Street
Woodside, New York 11377
(718) 899-2311

REPORT OF FIELD SERVICE

LOCATIONS | **DEVICES**

FLOOR				TTB'S		STRB. PNL.	MAINT
6	B STAIRWAY			2			✓
	B COMM.				AFC 100	1	✓
5	B COMM				AFC 100	1	OUT SERV.
5	B STAIR			1			✓
5	W. MEZ. (FAN RM)			2			✓
4	B COMM				AFC 100	1	✓
3	B STAIR			1			✓
3	B COMM				AFC 100	1	✓
2	FRONT AREA WALL				AFC 100	1	✓
1	PUMP RM				AFC 100	1	✓
1	PUMP RM			1			✓
48	PLANT MEZ				AFC 100	1	✓
47	A STAIR CLOSET				AFC 100	1	✓
46	ELEV. S/D by SHUTTLE (Replaced) / INSTALLED - BACK IN OPERATION. -				ELEVATION (JOHNSON FL. OLD UNIT BROKEN		
46	B COMM				AFC 100	1	✓

INVOICE TO: T.W.T.C.
N.Y.C.
ATT: J. CALLIGAN

SERVICEMAN ASSIGNED	SEE AT JOB SITE
J. TORRES / F. ROSARIO	F.S.I.
CONTRACT # S/C 00818	DATE SCHEDULED 1-23-01
FEE SERVICE #	TYPE OF SYSTEM LSN 2000
CALL AUHTORIZED BY	P.O. #
PHONE	EXT

☒ MAINTENANCE ☒ TEST
☐ JOB COMPLETE ☐ JOB INCOMPLETE
☐ SYSTEM ON LINE ☐ SYSTEM OFF LINE

DEPARTED SHOP	TIME IN	TIME OUT	RETURNED SHOP	TOTAL HOURS
800 AM/PM	900 AM/PM	430 AM/PM	AM/PM	

MATERIAL RECORD

QUANTITY	DESCRIPTION	COST
	PREVENTIVE MAINTENANCE CONTRACT	

CUSTOMER NAME (PRINT) SILVERSTEIN
CUSTOMER SIGNATURE
SERVICEMAN SIGNATURE

AUTHORIZATION FOR FIRE ALARM INTERRUPTION
The undersigned has been advised by Fire Service Inc. representatives that it may be necessary to interrupt the fire protection service by disconnecting the system and/or a component in the performance of their assigned work.
The undersigned hereby assumes the responsibility for the notification of the authorities at the time the interruption is initiated and will take all of the precautions deemed necessary during this period of interruption and hold harmless Fire Service Inc. and its employees regarding interruption of fire protection service during their service of the equipment.

DATE TIME NAME

SERVICE PERFORMED & REMAINING

Courtesy Rec. 2 Yearly Trouble on Risers TTB's Units & Strobes Light Fire Alarms PNL's. - Lobby's - Supervision / Door Release Voltages Out Puts. - Effects O.K. -

Also Repairs on 46th Fl. (Johnson Floor) Smoke Elev. Shuttle Detector Broken Replaced / Installed New Unit - (Big Problem) - Also Rec 3 -

(A) INACCESSIBLE (B) MISSING (C) DEFECTIVE (D) OTHER

FIRE SERVICE INCORPORATED

22210

Subsidiary of Firecom, Inc.
39-27 Fifty Ninth Street
Woodside, New York 11377
(718) 899-2311

REPORT OF FIELD SERVICE

LOCATIONS			DEVICES				
FLOOR			TTBJ		PANEL STRGS	MAINT
15	CORE HER		3	AFC[00]	1	✓
14	CORE HER			AFC[02]	1	✓
13	'B' COMM / 'A' ELECT.			AFC100	2	✓
12	'B' COMM / CORE HER		3	AFC101	2	✓
11	'B' COMM			AFC101 (BATTERY CHK.)	2	✓
10	N/A					
9	N/A.					
8	'B' COMM			AFC101	1	✓
7	'B' COMM / CORE HER	1		AFC100	1	✓
L66	(DCM - 40) F.C. STATION # 10			NETWORK / OPEN.	CHECK / PLUGS ADJ.	

INVOICE TO: 7 W.T.C.

N.Y.C.

SERVICEMAN ASSIGNED: J. TORRES / F. ROSARIO	SEE AT JOB SITE
CONTRACT #: S/C 00 818	DATE SCHEDULED: 1-17-01
FEE SERVICE #	TYPE OF SYSTEM: LSN 2000
CALL AUHTORIZED BY	P.O.#
PHONE	EXT

☒ MAINTENANCE ☒ TEST

☐ JOB COMPLETE ☐ JOB INCOMPLETE

☐ SYSTEM ON LINE ☐ SYSTEM OFF LINE

DEPARTED SHOP	TIME IN	TIME OUT	RETURNED SHOP	TOTAL HOURS
AM PM	800 AM PM	430 AM PM	AM PM	

MATERIAL RECORD

QUANTITY	DESCRIPTION	COST
	PREVENTIVE MAINTENANCE CONTRACT	

CUSTOMER NAME (PRINT): SILVERSTEIN

CUSTOMER SIGNATURE

SERVICEMAN SIGNATURE

AUTHORIZATION FOR FIRE ALARM INTERRUPTION
The undersigned has been advised by Fire Service Inc. representative that it may be necessary to interrupt the fire protection service by disconnecting the system and/or a component in the performance of their assigned work.
The undersigned hereby assumes the responsibility for the notification of the authorities at the time the interruption is initiated and will take all of the precautions deemed necessary during this period of interruption and hold harmless Fire Service Inc. and its employees regarding interruption of fire protection service during this service of the equipment.

NAME DATE TIME

SERVICE PERFORMED & REMAINING: CONTINUE PREV. MAINTENANCE ON RISERS TTB'S / STROBES PULS / SUBSYSTEMS — DOOR RELEASES / POWER VOLTAGES READINGS CHECKS O.K.

ALSO REPLACED STROBE PUL ON 16TH. — CKT / DISABLED DUE TO FAULTY. (WAIT AT FIELD — TO BE ACTIV. / TRACED. —

(A) INACCESSIBLE (B) MISSING (C) DEFECTIVE (D) OTHER

FIRE SERVICE INCORPORATED

22208

Subsidiary of Firecom, Inc.
39-27 Fifty Ninth Street
Woodside, New York 11377
(718) 899-2311

REPORT OF FIELD SERVICE

LOCATIONS | **DEVICES**

FLOOR				TTB's	PANEL STRBS		MAINTN
24	CORE	HER		(3)	1	AFC100	✓
23	CORE	HER					
22	'B' COMM.				(2)	AFC100	✓
21	CORE	HER		(2)	1	AFC100	✓
20	CORE	HER			1	AFC100	✓
19	CORE	HER			1	AFC100	✓
18	CORE	HER		(2)	2	AFC100	✓
17	CORE	HER			1	AFC100	✓
16	CORE	HER			1	AFC100	✓

(1) CKT DEFEC / UNIT REPAIRED

INVOICE TO: W.T.C.
N.Y.C

SERVICEMAN ASSIGNED: J. TORRES / F. ROSARIO	SEE AT JOB SITE: F.S.D.
	DATE SCHEDULED: (-16-01)
CONTRACT #: S/C00 818	TYPE OF SYSTEM: LSN 2000
FEE SERVICE #	P.O #: -
CALL AUHTORIZED BY	PHONE / EXT

☐ MAINTENANCE ☐ TEST
☐ JOB COMPLETE ☐ JOB INCOMPLETE
☐ SYSTEM ON LINE ☐ SYSTEM OFF LINE

DEPARTED SHOP	TIME IN	TIME OUT	RETURNED SHOP	TOTAL HOURS
800 AM (PM)	900 AM PM	430 AM (PM)	AM PM	

MATERIAL RECORD

QUANTITY	DESCRIPTION	COST
	PREVENTIVE MAINTENANCE CONTRACT	

CUSTOMER NAME (PRINT): S. LIEBSTEIN
CUSTOMER SIGNATURE:
SERVICEMAN SIGNATURE: J. Torres / F. Rosario

AUTHORIZATION FOR FIRE ALARM INTERRUPTION
The undersigned has been advised by Fire Service Inc. representative that it may be necessary to interrupt the fire protection service by disconnecting the system and/or a component in the performance of their assigned work.
The undersigned hereby assumes the responsibility for the notification of the authorities at the time the interruption is initiated and will take all of the precautions deemed necessary during this period of interruption and hold harmless Fire Service Inc. and its employees regarding interruption of the protection service during their service of the equipment.

NAME DATE TIME

SERVICE PERFORMED & REMAINING: Confirm Started - Perf. Maintenance on TTB's Riser (Floors) Above / Listed Strobes / NAC's / SUS Systems Took Reading Power Voltages Outputs B.E. - Normal Levels. - System put Back to Operation /

(A) INACCESSIBLE (B) MISSING (C) DEFECTIVE (D) OTHER

FIRE SERVICE INCORPORATED 26939

Subsidiary of Firecom, Inc.
39-27 Fifty Ninth Street
Woodside, New York 11377
(718) 899-2311

PREVENTIVE MAINTENANCE CONTRACT

REPORT OF FIELD SERVICE

LOCATIONS		DEVICES	
FLOOR		TTB'S	STROBE PNL
38	FREIGHT AREA	(1) DLC-3	(1) AFC100
37	FREIGHT AREA.	(1) D3C3	(1) AFC 100
36	FREIGHT AREA OPPOSITE/RECEPT (SOUTH)	(1) DLC1	(1) AFC 100
35	FREIGHT AREA		(1) AFC 100
34	FREIGHT AREA CONF. RM EAST	(1) D3C4	(2) AFC100 PAD102 (1) PAD102
33	FREIGHT AREA	(1) DLC1 BORE HOR.	(1) AFC 100
32	FREIGHT AREA	(1) D3C3	(1) AFC100
31	FREIGHT AREA	(1) D3C3	(1) AFC100
30	CORE HOR	(1) DLC1	(1) FREIGHT AREA. AFC100
29	FREIGHT AREA		(1) AFC100
28	FREIGHT AREA	(1) D3C4	(1) AFC100
27	CORE HOR.	(1) D3C3	(1) PYRO SPOT 3'
26	CORE HOR	—	(1) PYRO SPOT 3'
25	CORE HOR	—	(1) AFC100

INVOICE TO: T.W.T.C.
N.Y.C.

SERVICEMAN ASSIGNED: G. JORGE / F. ROSARIO	SEE AT JOB SITE: FS-7
	DATE SCHEDULED: 1-10-01
CONTRACT #: S10 0918	TYPE OF SYSTEM: LSN 2000
FEE SERVICE #	P.O. #
CALL AUHTORIZED BY	PHONE / EXT

☒ MAINTENANCE ☒ TEST
☐ JOB COMPLETE ☐ JOB INCOMPLETE
☐ SYSTEM ON LINE ☐ SYSTEM OFF LINE

DEPARTED SHOP	TIME IN	TIME OUT	RETURNED SHOP	TOTAL HOURS
AM PM	8D AM PM	430 AM PM	AM PM	

AUTHORIZATION FOR FIRE ALARM INTERRUPTION
The undersigned has been advised by Fire Service Inc. representative that it may be necessary to interrupt the fire protection service by disconnecting the system and/or a component in the performance of their assigned work.
The undersigned hereby assumes the responsibility for the acceptance of the authorities at the time the interruption is initiated and will take all of the precautions deemed necessary during the period of interruption and hold harmless Fire Service Inc. and its employees regarding interruption of fire protection service during this service of the equipment.

NAME _____ DATE _____ TIME _____

MATERIAL RECORD

QUANTITY	DESCRIPTION	COST

CUSTOMER NAME (PRINT): SILVERSTEIN
CUSTOMER SIGNATURE: [signature]
SERVICEMAN SIGNATURE: [signature]

SERVICE PERFORMED & REMAINING: Service Carried Out Maintenance on TTB'S Riser's As Listed on Floor's 38th Hex 25th. — Also Strobes Pull's. — Door Releases Power Riser's Checked/Working O.K. — Also Visibly Ply Check From Page/Room 32nd P.O.L. - (Double Page 37th) Clear. (Elect. Found Counter Unit Only). —

(A) INACCESSIBLE (B) MISSING (C) DEFECTIVE (D) OTHER

FIRE SERVICE INCORPORATED

97640

SUBSIDIARY OF FIRECO, INC.

39-27 FIFTY NINTH STREET
WOODSIDE, NEW YORK 11377
(718)899-2311

REPORT OF FIELD SERVICE

INVOICE TO

SERVICED

J.W.T.C.
N.Y.C.

CALL AUTHORIZED BY	CONTRACT #	FEE SERVICE #	FJ #	PO #	SEE AT JOB SITE
Shop-	S/C00898				F.S.J.

PHONE	EXT	DATE SCHEDULED	TIME SCHEDULED	SERVICEMAN ASSIGNED
		1-9-01	AM	J. Tokop

MATERIAL RECORD

QUANTITY ISSUED	QUANTITY B/O	FCI NO	DESCRIPTION	UNIT PRICE	PER	TOTAL AMOUNT
			PREVENTIVE MAINTENANCE CONTRACT			

CHECK APPROPRIATE BOX

- ☐ O.C
- ☐ I & T
- ☐ FEE CALL
- ☐ DELIVERY
- ☐ DEMO
- ☐ EMERGENCY CALL
- ☒ CONTRACT CALL
- ☐ PICK UP
- ☐ DEMO OWNER
- ☐ SURVEY

DEPARTED SHOP	TIME IN	TIME OUT	RETURNED SHOP	TOTAL HOURS	START MILEAGE	END MILEAGE	MISC EXPENSE	CAR FARE
	800	420						
	AM.	PM						

- ☐ MAT REQD ☐ PARTIAL
- ☐ OTHER ☐ LABOR REQD

SERVICE DATE: 1-9-01

CUSTOMER SIGNATURE

WILL RETURN ON

SERVICEMAN SIGNATURE

I & T COMPLETE ☐ CALL COMPLETE ☐

AUTHORIZATION FOR FIRE ALARM INTERRUPTION

The undersigned has been advised by Fire Service, Inc. representative that it may be necessary to interrupt the fire protection service by disconnecting the system and/or a component in the performance of their assigned work.

The undersigned hereby assumes the responsibility for the notification of the authorities at the time the interruption is initiated and will take all of the precautions deemed necessary during the period of interruption and hold harmless Fire Service Inc. and its employees regarding interruption of the protection service during their service of the equipment.

Date

Name

X

PROBLEM—AS DESCRIBED: Service Contract / Status Repairs Purge / Pressuration — Floors 25/26/24th Fl. — as per F.S.J. Request — and 23rd Pressuration. —

SERVICE PERFORMED: As per Contract check follow up on Purge / Pressuration Activation Fan's Units Had Functions as: 25 Fl. Purge - Pressuration 26 and 24 Floors. — + Pressuration 25th Fl. Units. Repairs / Exchanges (1) 792 P.C. Board (Output Functions Down) Wagner System - Units Back in Operation Check O.K. — 24th Fl 798 Unit - Also Check with Electrician Frost / For Floor Purge 39th Fl + Stroke Pull. — Check Defective Circuits / Short + Grounds - All Protected. - Ckts Normal. - Trouble Conditions Clear. — Back in Operation. —

WORK REMAINING: Of Service Contract.

FCI 155
REV 6186

FIRE SERVICE INCORPORATED

22207

Subsidiary of Firecom, Inc.
39-27 Fifty Ninth Street
Woodside, New York 11377
(718) 899-2311

REPORT OF FIELD SERVICE

LOCATIONS		DEVICES			CHK
FLOOR					
47	(1)	TTB	DATA	3/4	✓
47	(1)	TTB	DATA	1/2	✓
47	(1)	STROBE	PNL		✓
46	(1)	STROBE	PNL		✓
45	(1)	TTB	DATA	3/4	✓
45	(1)	TTB	DATA	1/2	✓
45	(3)	STROBES	PNL's		✓
44	(1)	STROBE	PNL		✓
43	(1)	STROBE	PNL		✓
43	(1)	TTB	DATA	3/4	✓
42	(1)	STROBE	PNL		✓
42	(1)	TTB	DATA	3/4	✓
42	(1)	TTB	DATA	1/2	✓
41	(1)	STROBE	PNL		✓
40	(1)	STROBE	PNL		✓
40	(1)	TTB	DATA	3/4	✓
39	(1)	STROBE	PNL		✓
39	(1)	TTB	DATA	1/2	✓

INVOICE TO: W.T.C.
N.Y.C.

SERVICEMAN ASSIGNED: J. Torres, F. Rosario	SEE AT JOB SITE: F.S.D.
	DATE SCHEDULED: 1-3-01
CONTRACT #: S/C00 818	TYPE OF SYSTEM: LSN 2000
FEE SERVICE #	P.O #
CALL AUHTORIZED BY	PHONE / EXT

☒ MAINTENANCE ☒ TEST
☐ JOB COMPLETE ☐ JOB INCOMPLETE
☐ SYSTEM ON LINE ☐ SYSTEM OFF LINE

DEPARTED SHOP	TIME IN	TIME OUT	RETURNED SHOP	TOTAL HOURS
AM PM	800 AM PM	430 AM PM	AM PM	

MATERIAL RECORD

QUANTITY	DESCRIPTION	COST
	PREVENTIVE MAINTENANCE CONTRACT	

CUSTOMER NAME (PRINT)
CUSTOMER SIGNATURE
SERVICEMAN SIGNATURE

AUTHORIZATION FOR FIRE ALARM INTERRUPTION
The undersigned has been advised by Fire Service Inc. representative that it may be necessary to interrupt the fire protection service by disconnecting the system and/or a component in the performance of their assigned work.
The undersigned hereby assumes the responsibility for the notification of the authorities at the time the interruption is initiated and will take all of the precautions deemed necessary during this period of interruption and hold harmless Fire Service Inc. and its employees regarding interruption of fire protection service during these service of the equipment.

TIME
DATE
NAME

SERVICE PERFORMED & REMAINING: S/CONTRACT - CHECK/P.M. MAINTENANCE ON TTB'S LISTED ON FLOOR'S 47 - 46 - 45 - 44 - 43 - 42 - 41 - 40 - 39 ETC. -

ALSO CHECK FOR FLOOR PAGE JACK PHONE ON 39 FL. (FOREST ELECTRIC AND UNITS) (1) CRT GROUNDED / SHORTED - ALSO (1) STROBE CRT SHORTED. - ELECTRICIAN TO TRACE WIRING. - SPKR'S / STROBES ONLY (1) CKT EACH IN OPERATION. -

(A) INACCESSIBLE (B) MISSING (C) DEFECTIVE (D) OTHER

FIRE SERVICE INCORPORATED

22206

Subsidiary of Firecom, Inc.
39-27 Fifty Ninth Street
Woodside, New York 11377
(718) 899-2311

REPORT OF FIELD SERVICE

LOCATIONS | **DEVICES**

FLOOR		PURGE		PRESS	PRESS		
7		✓		8	—		
8		✓		8	7		
9		✓		10	8		
10		✓		9	11		
11		✓		12	10		
12		✓		13	11		
13		✓		14	12		
14		✓		15	13		
15		✓		14	16		
16		✓		17	15		
17		✓		16	18		
18		✓		17	19		
19		✓		20	18		
20		✓		21	19		
21		✓		22	20		
22		✓		21	23		
23		✓		22	—		
24		✓		23	—		
25		—	N/G	—	—		
26		✓		27	—		
27		✓		28	26		
28		✓		27	29		
29		✓		28	30		
30		✓		29	31		
31		✓		30	32		
32		✓		31	33		
33		✓		32	34		
34		✓		33	35		
35		✓		36	34		
36		✓		37	35		
37		✓		38	36		
38		✓		37	39		
39		✓		38	40		
40		✓		41	39		
41		✓		40	42		
42		✓		43	41		
43		✓		44	42		
44		✓		43	45		
45		✓		44	46		
46		✓		45	—		
47		—		—	—		

INVOICE TO: 7 W.T.C

N-7-C

SERVICEMAN ASSIGNED: J. Tolley / F. Rosario	SEE AT JOB SITE: F-SD
	DATE SCHEDULED: 1-2-01
CONTRACT #: S/C 00 818	TYPE OF SYSTEM: CSN 2000
FEE SERVICE #	P.O. #
CALL AUHTORIZED BY	PHONE / EXT

☑ MAINTENANCE ☐ TEST

☐ JOB COMPLETE ☑ JOB INCOMPLETE

☐ SYSTEM ON LINE ☐ SYSTEM OFF LINE

DEPARTED SHOP	TIME IN	TIME OUT	RETURNED SHOP	TOTAL HOURS
800 AM/PM	900 AM/PM	430 AM/PM	AM/PM	

MATERIAL RECORD

QUANTITY	DESCRIPTION	COST
	PREVENTIVE MAINTENANCE CONTRACT	

CUSTOMER NAME (PRINT)

CUSTOMER SIGNATURE

SERVICEMAN SIGNATURE

AUTHORIZATION FOR FIRE ALARM INTERRUPTION
The undersigned has been advised by Fire Service Inc. representative that it may be necessary to interrupt the fire protection service by disconnecting the system and/or a component in the performance of their assigned work.
The undersigned hereby assumes the responsibility for the notification of the authorities at the time the interruption is initiated and will take all of the precautions deemed necessary during the period of interruption and hold harmless Fire Service Inc. and its employees regarding interruption of fire protection service during their service of the equipment.

TIME _____ DATE _____ NAME _____

SERVICE PERFORMED & REMAINING

As per Bill Request - Check For Operation as Purge / Press. Status Indications at Console Found Missing Pressurization on 23-24-25-26 as Listed Above. Also 47/46 as Listed. — Manual Press. on Floors 47/46 - 5-3 Manual Purge on Floors 4-3-2-3 FL. —

(A) INACCESSIBLE (B) MISSING (C) DEFECTIVE (D) OTHER

see Print Out. —

FIRE SERVICE INCORPORATED

93978

SUBSIDIARY OF FIRE-ON, INC.
39-27 FIFTY NINTH STREET
WOODSIDE, NEW YORK 11377
(718) 899-2311

REPORT OF FIELD SERVICE

INVOICE TO

SERVICED
7 WORLD TRADE CENTER
NEW YORK. NY

CALL AUTHORIZED BY	CONTRACT #	FEE SERVICE #	FJ #	PO #	SEE AT JOB SITE
R.T	SCH UPS				J F.S.D

PHONE	EXT	DATE SCHEDULED	TIME SCHEDULED	SERVICEMAN ASSIGNED
		1-4-2001	AM	C. FORERO

MATERIAL RECORD

QUANTITY ISSUED	QUANTITY B/O	FCI NO	DESCRIPTION	UNIT PRICE	PER	TOTAL AMOUNT
			PREVENTIVE MAINTENANCE CONTRACT			

AUTHORIZATION FOR FIRE ALARM INTERRUPTION

The undersigned has been advised by Fire Service, Inc. representative that it may be necessary to interrupt the fire protection service by disconnecting the system and/or a component in the performance of their assigned work.
The undersigned hereby assumes the responsibility for the notification of the authorities at the time the interruption is initiated and will take all of the precautions deemed necessary during the period of interruption and hold harmless Fire Service Inc. and its employees regarding interruption of fire protection service during their service of the equipment.

Date

X

Name

CHECK APPROPRIATE BOX

- ☐ Q.C
- ☐ I & T
- ☐ FEE CALL
- ☐ DELIVERY
- ☐ DEMO
- ☐ EMERGENCY CALL
- ☒ CONTRACT CALL
- ☐ PICK UP
- ☐ DEMO OWNER
- ☐ SURVEY

DEPARTED SHOP	TIME IN	TIME OUT	RETURNED SHOP	TOTAL HOURS	START MILEAGE	END MILEAGE	MISC EXPENSE	CAR FARE

☐ MAT REQD ☐ PARTIAL
☐ OTHER ☐ LABOR REQD

SERVICE DATE: 1-4-2001

CUSTOMER SIGNATURE: X

I & T COMPLETE ☐ CALL COMPLETE ☐

WILL RETURN ON

SERVICEMAN SIGNATURE: C. FORERO

PROBLEM—AS DESCRIBED: PREVENTIVE MAINTENANCE / SERVICE CONTRACT (UPS)

SERVICE PERFORMED: Checked U.P.S System Took Readings (OK)
Total Battery Voltage 140.5 V-dc, output HZ 62.2
L1=12.5 L=10.9 (OK) Checked and Cleaned Battery Rack #1 & #2
and Main Cabinet, Filters Mini-Fans (OK)
System operational.

WORK REMAINING

OK Tony 1/4/01

(Battery Rack = 30 pcs)

FCI 155
REV 6186

FIRE SERVICE INCORPORATED

22204

Subsidiary of Firecom, Inc.
39-27 Fifty Ninth Street
Woodside, New York 11377
(718) 899-2311

REPORT OF FIELD SERVICE

LOCATIONS | **DEVICES**

FLOOR	AREAS.		S/D	CABLE	XTNSL	SENS TEST	CHANGE
45	FREIGHT ELEV		BLK	2	022	3.0	✓
	PASS ELEV		BLK	2	022	3.2	✓
	ELECT	A	BLK	2	217	3.0	✓
	COMM	A	BLK	2	217	3.0	✓
	ELECT	B	BLK	2	217	2.8	✓
	TELE	B	BLK	2	217	3.0	✓
	COMM	B	BLK	2	217	3.0	✓
	G ELECTRIC		PEL3	4	083	2.8	✓
	SECURITY		PEL3T	4	083	2.8	✓
45	SHUTTLE ELEV		PEL3	4	011	3.0	✓
	KITCHN SHUTTLE ELEV		PEL3	4	012	3.0	✓
D	AREA STAIR		PEL3T	4	063	3.0	✓
	SHUTTLE FREIGHT KITCHN		PEL3T	4	019	3.0	✓
	AUDIO/VISUAL		PEL3T	4	091	3.0	✓
	AREA RISER SHAFT			4	089	3.0	✓
	EAST ELECT-F		PEL3T	4	059	3.0	✓
	DUCT AT. KITCHN.		EDWDS	4	094	3.2	✓
	D/DET. KITCHN		EDWDS	4	123	3.2	✓
	D/D. KITCHN F45-4		EDWDS	4	092	3.2	✓

PREVENTIVE MAINTENANCE CONTRACT

INVOICE TO: 7 W.T.C. N.Y.C. (SOLOMON BROTHERS)

SERVICEMAN ASSIGNED: J. TORRES, F. ROSARIO	SEE AT JOB SITE: F.S.I.
	DATE SCHEDULED: 12/27-00
CONTRACT #: 5/C00 818	TYPE OF SYSTEM: CSN 2000
FEE SERVICE #	P O #
CALL AUHTORIZED BY	PHONE / EXT

☒ MAINTENANCE ☒ TEST
☐ JOB COMPLETE ☐ JOB INCOMPLETE
☐ SYSTEM ON LINE ☐ SYSTEM OFF LINE

DEPARTED SHOP	TIME IN	TIME OUT	RETURNED SHOP	TOTAL HOURS
AM PM	8:30 AM PM	9:30 AM PM	AM PM	

MATERIAL RECORD

QUANTITY	DESCRIPTION	COST

CUSTOMER NAME (PRINT): SILVERSTEIN
CUSTOMER SIGNATURE
SERVICEMAN SIGNATURE: J. Torres, F. Rosario

AUTHORIZATION FOR FIRE ALARM INTERRUPTION
The undersigned has been advised by Fire Service Inc. representative that it may be necessary to interrupt the fire protection service by disconnecting the system and/or a component in the performance of their assigned work.
The undersigned hereby assumes the responsibility for the notification of the authorities at the time the interruption is initiated and will take all of the precautions deemed necessary during this period of interruption and hold harmless Fire Service Inc. and its employees regarding interruption of fire protection service during their service of the equipment.

NAME DATE TIME

SERVICE PERFORMED & REMAINING: Prev. Maint. Inspection & Sensitivity Test on Smoke Detection System. Check 'E' Fire System. CSN 2000 Model. On 45th Fl. (Solomon Brothers) - System Functioning - Back to Normal

(A) INACCESSIBLE (B) MISSING (C) DEFECTIVE (D) OTHER

FIRE SERVICE INCORPORATED

22205

Subsidiary of Firecom, Inc.
39-27 Fifty Ninth Street
Woodside, New York 11377
(718) 899-2311

REPORT OF FIELD SERVICE

LOCATIONS | **DEVICES**

INVOICE TO: T.W.T.C.
N.Y.C.

FLOOR			(Chime)	Cable	XTNDR	S/D	SENS TEST
GROUND	CEILING			1	163	BLK	3.0
	"			1	163	BLK	3.2
	"			1	163	BLK	3.2
	"			1	163	BLK	3.0
G	CEILING			1	163	BLK	3.2
	—			—			
G	ELEV. MACHINERY			1	000	BLK	3.0
16	STOREWAY		CHECK / NORMAL WIRING SYSTEM NORMAL.				—

PREVENTIVE MAINTENANCE CONTRACT

SERVICEMAN ASSIGNED	SEE AT JOB SITE
J. TOLLEY / F. ROSALIA	F-S-D.
	DATE SCHEDULED 12-26-00
CONTRACT # S1C00 818	TYPE OF SYSTEM CSN 2000
FEE SERVICE # —	PO #
CALL AUHTORIZED BY	PHONE / EXT

☒ MAINTENANCE ☐ TEST
☐ JOB COMPLETE ☐ JOB INCOMPLETE
☐ SYSTEM ON LINE ☐ SYSTEM OFF LINE

DEPARTED SHOP	TIME IN	TIME OUT	RETURNED SHOP	TOTAL HOURS
12:00 AM PM	12:45 AM PM	4:30 AM PM	AM PM	

MATERIAL RECORD

QUANTITY	DESCRIPTION	COST

CUSTOMER NAME (PRINT) RUBENSTEIN
CUSTOMER SIGNATURE
SERVICEMAN SIGNATURE

AUTHORIZATION FOR FIRE ALARM INTERRUPTION
The undersigned has been advised by Fire Service Inc. representative that it may be necessary to interrupt the fire protection service by disconnecting the system and/or a component in the performance of their assigned work.
The undersigned hereby assumes the responsibility for the acceptance of the authorization at the time the interruption is initiated and will take all of the precautions deemed necessary during the period of interruption and hold harmless Fire Service Inc. and its employees regarding interruption of fire protection service during their service of the equipment.

DATE X TIME NAME

SERVICE PERFORMED & REMAINING: PREV. MAINTENANCE. / SILVERSIDE AREA - GROUND FLOOR - HIGH CEILING MAIN ENTRANCE (USES GENIE BOOM) SMOKE DETECTORS CLOSE FIRE ALARM SYSTEM. - SYSTEM OK/NORMAL. - — ASSIST BP ON SILVERSIDE Eng. KEVIN ALSO (HEAVY) 39 FL STROBE PNL CKTS - FIELD WIRING SHORTS / PANEL DISPLAY. — (FROM UNDER FLOOR / RENOVATIONS) ALSO FLOOR PAGE SPK CKTS. - TROUBLE STATUS;

(A) INACCESSIBLE (B) MISSING (C) DEFECTIVE (D) OTHER

FIRE SERVICE INCORPORATED

22203

Subsidiary of Firecom, Inc.
39-27 Fifty Ninth Street
Woodside, New York 11377
(718) 899-2311

REPORT OF FIELD SERVICE

LOCATIONS | **DEVICES**

FLOOR			CABLE	XMTR	S/D	SENS TEST	CLEANED
3RD	SECURITY		3	048	PEC3	3.0	✓
	D/D AHU 34		3	042	EDWDS	3.2	✓
	KITCHEN SUPPLY						
	W. HER AREA		3	006	PEC3T	3.0	✓
	W. HER AREA		3	006	PEC3T	3.0	✓
2ND	W. HER D/D		3	040	EDWDS	3.2	✓
	W. HER D/D		3	041	EDWDS	3.4	✓
	W HER D/D		3	040	EDWDS	3.2	✓
	W. HER D/D		3	040	EDWDS	3.2	✓
3RD	CONF. AREA		1	077	DI-3	3.0	✓
	RECEPTION AREA		1	077	DI-3	3.0	✓
	ELEV. LOBBY		3	029	PEC3	3.0	✓
2ND	ELEV LOBBY		3	028	PEC3	3.0	✓
2ND	ELEV RM		3	005	PEC3T	3.2	✓
1ST	PLANT HER D/D		3	039	EDWDS	3.2	✓
	PLANT HER D/D		3	037	EDWDS	3.2	✓
	PLANT AREA		1	012	PEC3T	2.8	✓
30	COMMUNICATIONS B (AREA S/D)	BOX UNIT -	1	184	RETESTED / CHECK O.K.		

INVOICE TO: W.T.C. (SODEXHO BOSTON) H.Y.C.

SERVICEMAN ASSIGNED	SEE AT JOB SITE
J. TORRES / J. ROSARIO	F.S.D
CONTRACT #	DATE SCHEDULED
S/C 00 818	12-20-00
FEE SERVICE #	TYPE OF SYSTEM
	LSN 2000
CALL AUTHORIZED BY	P.O. #
	PHONE / EXT

☑ MAINTENANCE ☑ TEST
☐ JOB COMPLETE ☐ JOB INCOMPLETE
☐ SYSTEM ON LINE ☐ SYSTEM OFF LINE

DEPARTED SHOP	TIME IN	TIME OUT	RETURNED SHOP	TOTAL HOURS
AM PM	8:00 AM PM	4:30 AM PM	AM PM	

MATERIAL RECORD

QUANTITY	DESCRIPTION	COST
	PREVENTIVE MAINTENANCE CONTRACT	

CUSTOMER NAME (PRINT): Sean O'Keeffe
CUSTOMER SIGNATURE:
SERVICEMAN SIGNATURE:

AUTHORIZATION FOR FIRE ALARM INTERRUPTION
The undersigned has been advised by Fire Service Inc. representative that it may be necessary to interrupt the fire protection service by disconnecting the system and/or a component in the performance of their assigned work.
The undersigned hereby assumes the responsibility for the notification of the authorities at the time the interruption is initiated and will take all of the precautions deemed necessary during this period of interruption and hold harmless Fire Service Inc. and its employees regarding presumption of fire protection service during their service of the equipment.

TIME / DATE / NAME

SERVICE PERFORMED & REMAINING: PREVENTIVE MAINTENANCE / SENSITIVITY TEST ON SMOKE UNITS CLASS E SYSTEM - SEMI ANNUAL TEST COMPLETED. - AS PER CONTRACT ON AREAS / FLOORS ABOVE LISTED. -

ALSO VISIT ON 30TH B COMMUNICATIONS ROOM - RETESTED / CHECK FOR MANUAL OPERATION / ALL - O.K. -

(A) INACCESSIBLE (B) MISSING (C) DEFECTIVE (D) OTHER

FIRE SERVICE INCORPORATED

22184

Subsidiary of Firecom, Inc.
39-27 Fifty Ninth Street
Woodside, New York 11377
(718) 899-2311

REPORT OF FIELD SERVICE

LOCATIONS | **DEVICES**

FLOOR			CABLE	XTNDR	S/D	SENS TEST	CHANNEL
5TH	MAIN ELEV.		1	004	BRK	3.0	✓
	FREIGHT ELEV		1	004	BRK	3.2	✓
	ROTO CLONE		3	013	PEC3T	3.0	✓
	ROTO CLONE		3	013	PEC3T	3.0	✓
	ELECT	A	1	169	BRK	3.0	✓
	ELECT	B	1	169	BRK	3.2	✓
	ELECT	C	1	169	BRK	3.0	✓
	ELECT	F	1	169	BRK	3.2	✓
	TELEPH	A	1	169	BRK	3.0	✓
	COMM	B	1	169	BRK	3.0	✓
4TH	MAIN ELEV.		1	003	BLK	3.0	✓
	FREIGHT ELEV		1	003	BLK	3.2	✓
	CHEF'S OFFICE		3	043	ENVAL	3.0	✓
	ELECT	B	1	167	BLK	3.0	✓
	TELEPH	A	1	167	BLK	3.0	✓
	ELECT	A	1	167	BLK	3.0	✓
	ELECT	G	3	050	PEC3	2.8	✓
	TELEPH	B	1	167	BRK	3.0	✓
	COMM	B	1	167	BLK	3.0	✓
37	Floor Page Trouble STATUS — CHECK Due to 'B' Loop Grounded. — (Forest Elect. Notified). — to Locate Unit(s) Grounded. —						

INVOICE TO: 7 PFW.T.C. N.Y.C.

SERVICEMAN ASSIGNED: C. Lonergan, F. Rosario

SEE AT JOB SITE: F.S.I.

DATE SCHEDULED: 12-19-00

CONTRACT #: SK00818

TYPE OF SYSTEM: LSN2000

FEE SERVICE #:

P O #:

CALL AUHTORIZED BY | PHONE | EXT

☑ MAINTENANCE ☑ TEST

☐ JOB COMPLETE ☐ JOB INCOMPLETE

☐ SYSTEM ON LINE ☐ SYSTEM OFF LINE

DEPARTED SHOP	TIME IN	TIME OUT	RETURNED SHOP	TOTAL HOURS
AM PM	800 AM PM	930 AM PM	AM PM	

MATERIAL RECORD

QUANTITY	DESCRIPTION	COST
	PREVENTIVE MAINTENANCE CONTRACT	

CUSTOMER NAME (PRINT): Sean O'Keefe

CUSTOMER SIGNATURE

SERVICEMAN SIGNATURE

AUTHORIZATION FOR FIRE ALARM INTERRUPTION

The undersigned has been advised by Fire Service Inc. representative that it may be necessary to interrupt the fire protection service by disconnecting the system and/or a component in the performance of their assigned work.

The undersigned hereby assumes the responsibility for the notification of the authorities at the time the interruption is initiated and will take all of the precautions deemed necessary during this period of interruption and hold harmless Fire Service Inc. and its employees regarding interruption of the protection service during their service of the equipment.

NAME DATE TIME

SERVICE PERFORMED & REMAINING: Preventive Maintenance / Servicing Smoke Detection on Solomon Smith Floors 5th/4th. - Area of Kitchen Alone - Also 37th Spke Page Trouble Condition found 'B' Loop Grounded - Elect. Forest Notified (Units were Alone) - To Locate Unit + Correct. —

(A) INACCESSIBLE (B) MISSING (C) DEFECTIVE (D) OTHER

FIRE SERVICE INCORPORATED

22183

Subsidiary of Firecom, Inc.
39-27 Fifty Ninth Street
Woodside, New York 11377
(718) 899-2311

REPORT OF FIELD SERVICE

LOCATIONS | **DEVICES**

FLOOR				XMTR/R	SENS TEST	S/D.	CLEANED
27	ELECT	A-B	(2)	2-178	3.0	BLK	✓
	COMM	A-B	(2)	2-178	3.0	BLK	✓
	TELEPH	A-B	(2)	2-178	3.2/3.0	BLK	✓
	COMM	C-D	(2)	2-177	3.0	BLK	✓
	ELECT	C-D	(2)	2-177	3.2/3.0	BLK	✓
	TELEPH	C-D	(2)	2-177	3.0/3.2	BLK	✓
	PASS ELEV.		(1)	2-004	3.0	BLK	✓
	FREIGHT ELEV		(1)	2-004	3.0	BLK	✓
	CORE AREA D/D			2-237	3.4	SIF24	✓
	CORE AREA D/D			2-237	3.2	SIF24	✓
27	LADIES BATH D/D R.			2-236	3.2	SIF-24	✓
	RET. D/D N/SOUTH		(2)	2-236	3.2	SIF24	✓
26	ELECT	A-B	(2)	2-176	3.0	BLK	✓
	COMM	A-B	(2)	2-176	3.2	BLK	✓
	TELEPH	A-B	(2)	2-176	3.0	BLK	✓
	COMM.	C-D	(2)	2-175	3.0	BLK	✓
	ELECT	C-D	(2)	2-175	3.0	BLK	✓
	TELEPH	C-D	(2)	2-175	3.2/3.0	BLK	✓
	PASS ELEV.		(1)	2-003	3.0	BLK	✓
	FREIGHT ELEV		(1)	2-003	3.2	BLK	✓
	CORE AREA D/D		(1)	2-235	3.4	SIF24	✓
	CORE AREA D/D		(1)	2-235	3.4	SIF24	✓
	RET. D/D LADIES		(1)	2-234	3.2	SIF24	✓
	NORTH D/D RET		(1)	2-234	3.2	SIF24	✓
	SOUTH D/D RET		(1)	2-234	3.4	SIF24	✓

PREVENTIVE MAINTENANCE CONTRACT

INVOICE TO: 7 W.T.C.
N.Y.C.

SERVICEMAN ASSIGNED: J. TORRES / F. ROSARIO	SEE AT JOB SITE: F.S.D.
	DATE SCHEDULED: 12-13-00
CONTRACT #: SIC00 818	TYPE OF SYSTEM: ISN 2000
FEE SERVICE #	P.O. #
CALL AUHTORIZED BY	PHONE / EXT

☒ MAINTENANCE ☐ TEST
☐ JOB COMPLETE ☐ JOB INCOMPLETE
☐ SYSTEM ON LINE ☐ SYSTEM OFF LINE

DEPARTED SHOP	TIME IN	TIME OUT	RETURNED SHOP	TOTAL HOURS
800 AM/PM	900 AM/PM	430 AM/PM	AM/PM	

MATERIAL RECORD

QUANTITY	DESCRIPTION	COST

CUSTOMER NAME (PRINT): SILVERSTEIN
CUSTOMER SIGNATURE
SERVICEMAN SIGNATURE

AUTHORIZATION FOR FIRE ALARM INTERRUPTION
The undersigned has been advised by Fire Service Inc. representatives that it may be necessary to interrupt the fire protection service by disconnecting the system and/or a component in the performance of their assigned work.
The undersigned hereby assumes the responsibility for the notification of the authorities at the time the interruption is initiated and will take all of the precautions deemed necessary during this period of interruption and hold harmless Fire Service Inc. and its employees regarding interruption of fire protection service during their service of the equipment.

NAME DATE TIME

SERVICE PERFORMED & REMAINING: PREVENTIVE MAINTENANCE OF CORTEX SMOKE DETECTORS UNITS SENSITIVITY + MAINTENANCE BY AREAS (ROOMS LISTED) ON FLOORS 27/26 FLOORS SYSTEM CHECKED. - FUNCTIONS OPERATIONAL NORMAL. -

(A) INACCESSIBLE (B) MISSING (C) DEFECTIVE (D) OTHER

FIRE SERVICE INCORPORATED

22182

Subsidiary of Firecom, Inc.
39-27 Fifty Ninth Street
Woodside, New York 11377
(718) 899-2311

REPORT OF FIELD SERVICE

LOCATIONS | **DEVICES**

FLOOR				STATUS	SENS TEST	CLEANED	S/D
29	ELECT	A-13	(2)	2-182	3.0	✓	BRK
	TELEPH	A-B	(2)	2-182	3.2	✓	BRK
	COMM	A-B	(2)	2-182	3.0	✓	BRK
	ELECT	C		2-181	3.0	✓	BRK
	ELECT	D.W/D	(2)	2-181	3.2/3.0	✓	BRK
	ELECT	G/SEC	(2)	3-007	3.0	✓	PEC 3
	ELECT	F		3-014	3.2	✓	PEC 3
	TELEPH	C-D	(2)	2-181	3.2/3.0	✓	BRK
	COMM	C		2-181	3.0	✓	BRK
	PASS/FREIGHT	ELEV	(2)	2-006	3.0	✓	BRK
	SHUTTLE	ELEV		3-040	2.8	✓	PEC 3
*	CORE	MEN AREA	(3)	2-240	3.0	✓	PEC 3T
*	CORE	MEN D/D	(2)	2-241	3.2	✓	SIE 24
29	W. MEN	AREA	(2)	3-000	3.0	✓	PEC 3T
	W. MEN	DIRT	DET (1)	3-032	3.2	✓	EDWDS.
28	ELECT	A-B	(2)	2-180	3.0	✓	BRK
	COMM	A-B	(2)	2-180	3.2	✓	BRK
	TELEPH	A-B	(2)	2-180	3.0	✓	BRK
	ELECT	C-D	(2)	2-179	3.0	✓	BRK
	COMM	C-D	(2)	2-179	3.2/3.0	✓	BRK
	TELEP/PAY	C	(1)	2-179	3.0	✓	BRK
	ELECT	D.W	(1)	2-179	3.0	✓	PEC 3T
	ELECT	F	(1)	2-179	2.8	✓	PEC 3T
	ELECT	G/SEC.	(1)	2-180	3.0	✓	PEC 3
	PASS ELEV		(1)	2-005	2.8	✓	EDWDS
	FREIGHT	ELEV	(1)	2-005	3.0	✓	EDWDS
	SHUTTLE	ELEV	(1)	2-005	3.0	✓	PEC 3
	CORE	MEN AREA		2-239	3.2	✓	SIE 24
	CORE	MEN DIRT	DET	2-239	3.2	✓	SIE 24
	W. MEN	AREA	(3)	3-057	3.0	✓	PEC 3T
28	W. MEN	DIRT		3-047	3.2	✓	DT 3

INVOICE TO: 2W.T.C
N.Y.C

SERVICEMAN ASSIGNED	SEE AT JOB SITE
J. TOLLEY / F. ROSARIO	F.S.I.
DATE SCHEDULED	12-12-00
CONTRACT #	S/C 00 818
TYPE OF SYSTEM	CSN 2000
FEE SERVICE #	P.O. #
CALL AUHTORIZED BY	PHONE / EXT

☒ MAINTENANCE ☒ TEST
☐ JOB COMPLETE ☐ JOB INCOMPLETE
☐ SYSTEM ON LINE ☐ SYSTEM OFF LINE

DEPARTED SHOP	TIME IN	TIME OUT	RETURNED SHOP	TOTAL HOURS
AM PM	800 AM PM	430 PM	AM PM	

MATERIAL RECORD

QUANTITY	DESCRIPTION	COST
	PREVENTIVE MAINTENANCE CONTRACT	

CUSTOMER NAME (PRINT) SIGNATURE
CUSTOMER SIGNATURE
SERVICEMAN SIGNATURE

AUTHORIZATION FOR FIRE ALARM INTERRUPTION
The undersigned has been advised by Fire Service Inc. representative that it may be necessary to interrupt the fire protection service by disconnecting the system and/or a component in the performance of their assigned work.
The undersigned hereby assumes the responsibility for the notification of the authorities at the time the interruption is initiated and will take all of the precautions deemed necessary during the period of interruption and hold harmless Fire Service Inc. and its employees regarding interruption of the protection service during their service of the equipment.

NAME DATE TIME

SERVICE PERFORMED & REMAINING: Routine Preventive Maintenance Clean & Tested - Security On Source With Floors 29 & 28 (As Listed Above) - System Back In Service
(*) NOTE: 29th FL Core Area D/D (1) Pendant Unit U/N For Service & Danger - High Power Like Cathedral (1) Area Unit Ceiling - Bldg to Provide Safe Access For Service / Core Area -

(A) INACCESSIBLE (B) MISSING (C) DEFECTIVE (D) OTHER

FIRE SERVICE INCORPORATED

22215

Subsidiary of Firecom, Inc.
39-27 Fifty Ninth Street
Woodside, New York 11377
(718) 899-2311

REPORT OF FIELD SERVICE

LOCATIONS | **DEVICES**

INVOICE TO: T.W.T.C
N.Y.C.

FLOOR			Cable	Xtnsn	S/D	Sens Test	Changes
31	Elect	A-B	2	187	BRK	3.0	✓
	Teleph	A-B	2	187	BRK	3.2/3.0	✓
	Comm	A-B	2	187	BLK	3.0	✓
	Elect	C-D	2	186	BLK	3.2	✓
	Elect	D.W	2	186	BRK	3.0	✓
	Elect	F	3	016	PEC 3	3.0	✓
	Elect	G	3	009	PEC 3	2.8	✓
	Security		3	009	PEC 3	3.0	✓
	Coat/Comm 'B'		2	186	BLK	3.0	✓
	Coat D.W.		2	186	BRK	3.0	✓
	Pass Elev. Main		2	008	BRK	3.0	✓
	Freight Elev		2	008	BLK	3.0	✓
	Shuttle Elev		3	025	PEC 3	3.0	✓
	Core Her Area	(3)	2	244	PEC 3T	3.0	✓
	Core Her D/D	(2)	2	245	SIF 24	3.2	✓
	W. Her Area	(2)	3	002	PEC 3T	3.0	✓
	W. Her D/D	(2)	3	034	EDWJS	3.2	✓
	N. Supply Closet	(2)	2	186	BLK	3.0	✓
30	Elect	A-B (2)	2	184	BLK	3.0	✓
*	Comm	A-B (2)	2	184	BLK	3.0	✓
	Teleph	A-B (2)	2	184	BRK	3.0	✓
	Elect	C-D (2)	2	183	BRK	3.2	✓
	Elect	D.W	2	183	BLK	3.0	✓
	Elect	F	3	015	PEC 3	3.2	✓
	Elect	G/Sec. (2)	3	008	PEC 3	3.0/3.2	✓
	Tele/Comm	C (2)	2	183	BRK	3.0	✓
	Coat/Comm	'D'	2	183	BLK	3.0	✓
	Pass/Freight Elev	(2)	2	007	BLK/DIB	3.0	✓
	Shuttle Pass Elev.		3	024	PEC 3	2.8	✓
	Core Her Area	(3)	2	242	PEC 3T	3.2	✓
	Core Her D/D	(2)	2	243	SIF 24	3.2	✓
	W. Her D/D	(2)	3	033	EDWJS	3.0	✓
	W. Her D/D		3	033	EDWJS	3.2	✓
	W. Her Area		3	001	PEC 3T	3.2	✓
	W. Her Area		3	001	PEC 3T	3.0	✓

SERVICEMAN ASSIGNED: F. Lopez, F. Rosario
SEE AT JOB SITE: F.J.J.
DATE SCHEDULED: 12-6-00
CONTRACT #: S/C 00818
TYPE OF SYSTEM: 8500
FEE SERVICE #:
P.O. #:
CALL AUHTORIZED BY:
PHONE:
EXT:

☒ MAINTENANCE ☒ TEST
☒ JOB COMPLETE ☐ JOB INCOMPLETE
☐ SYSTEM ON LINE ☐ SYSTEM OFF LINE

DEPARTED SHOP	TIME IN	TIME OUT	RETURNED SHOP	TOTAL HOURS
AM PM	800 AM PM	430 AM PM	AM PM	

MATERIAL RECORD

QUANTITY	DESCRIPTION	COST
	PREVENTIVE MAINTENANCE CONTRACT	

CUSTOMER NAME (PRINT):
CUSTOMER SIGNATURE:
SERVICEMAN SIGNATURE:

AUTHORIZATION FOR FIRE ALARM INTERRUPTION
The undersigned has been advised by Fire Service Inc. representative that it may be necessary to interrupt the fire protection service by disconnecting the system and/or a component in the performance of their assigned work.
The undersigned hereby assumes the responsibility for the notification of the authorities at the time the interruption is initiated and will take all of the precautions deemed necessary during the period of interruption and hold harmless Fire Service Inc. and its employees regarding interruption of the protection service during their service of the equipment.

NAME _____ DATE _____ TIME _____

SERVICE PERFORMED & REMAINING: PREV MAINTENANCE SMOKE DETECTOR UNITS LOCATED ON FLOORS 31 & 30 AS LISTED. - SYSTEM ACK/RESETED. - SENSITIVITY TEST CHECK. - AS ABOVE. -
NOTE: 30 FL. COMM 'B' CLOSET - BASE TERMINAL S/D DEFECTIVE - TO CHECK REPAIR. - TO CONTINUE -

(A) INACCESSIBLE (B) MISSING (C) DEFECTIVE (D) OTHER

FIRE SERVICE INCORPORATED

22214

Subsidiary of Firecom, Inc.
39-27 Fifty Ninth Street
Woodside, New York 11377
(718) 899-2311

REPORT OF FIELD SERVICE

LOCATIONS | **DEVICES**

FLOOR	AREA'S		CABL	XTUDR	S/D	SENS TEST	C/K/ANLY
33	ELECT	A-B (2)	2	191	BLK	3.2	✓
	COMM	A-B (2)	2	191	BRK	3.0	✓
	TELEPH	A-B (2)	2	191	BRK	3.2/3.0	✓
	ELECT	C-D (2)	2	192	BLK	3.0	✓
	ELECT	D.W	2	192	BRK	3.2	✓
	ELECT	F	3	018	PEC 3	2.8	✓
	ELECT	G/SEC. (2)	3	011	PEC 3	3.0	✓
	TEK/SUPPLY	C	2	192	BLK	3.0	✓
	COAT	D/TEK	2	192	BLK	3.2	✓
	FREIGH	PASS (2)	2	010	BLK	3.0	✓
	SHUTTLE	ELEV.	3	027	PEC 3	2.8	✓
	CORE MEN	AREA (3)	2	250	PEC 3T	3.0	✓
	CORE MEN	D/D (2)	2	249	SIF 24	3.2/3.0	✓
	W. MEN	AREA (2)	3	004	PEC 3T	2.8	✓
	W. MEN	D/D (2)	3	036	EDWIS	3.2	✓
32	ELECT	A-B (2)	2	190	BRK	3.0	✓
	COMM	A-B (2)	2	190	BRK	3.2/3.0	✓
	TELEPH	A-B (2)	2	190	BLK	3.0	✓
	ELECT	C-D (2)	2	189	BLK	3.0	✓
	ELECT	D.W	2	189	BRK	3.2	✓
	ELECT	F	3	017	PEC 3T	3.0	✓
	ELECT	G/SEC.	3	010	PEC 3T	3.2	✓
	TEK	D/SUPPLY	2	189	BLK	3.0	✓
	COMM	C/SUPPLY	2	189	BRK	3.2	✓
	MAIN	FREIGHT ELEV	2	009	BRK	3.0	✓
	SHUTTLE	ELEV	3	026	PEC 3	3.2	✓
	CORE MEN	AREA (3)	2	248	PEC 3T	3.0	✓
	CORE MEN	D/D (2)	2	247	SIF 24	3.0	✓
	W. MEN	AREA (2)	2	003	PEC 3T	3.2	✓
	W. MEN	[illegible]	3	035	EDWIS	3.4	✓
	W. MEN	D/D	3	035	EDWIS	3.2	✓
	TELEPH	C/COAT	2	189	BRK	3.0	✓

INVOICE TO: 7W.T.C

N.Y.C.

SERVICEMAN ASSIGNED: L. TORRES / F. ROSARIO	SEE AT JOB SITE: F.S.I
	DATE SCHEDULED: 12-5-00
CONTRACT #: S/C00 818	TYPE OF SYSTEM: LSN 2000
FEE SERVICE #	PO #
CALL AUHTORIZED BY	PHONE / EXT
☒ MAINTENANCE	☒ TEST
☐ JOB COMPLETE	☐ JOB INCOMPLETE
☐ SYSTEM ON LINE	☐ SYSTEM OFF LINE

DEPARTED SHOP	TIME IN	TIME OUT	RETURNED SHOP	TOTAL HOURS
AM / PM	8:00 AM / PM	4:30 AM / PM	AM / PM	

MATERIAL RECORD

QUANTITY	DESCRIPTION	COST
	PREVENTIVE MAINTENANCE CONTRACT	

CUSTOMER NAME (PRINT)

CUSTOMER SIGNATURE

SERVICEMAN SIGNATURE

AUTHORIZATION FOR FIRE ALARM INTERRUPTION

The undersigned has been advised by Fire Service Inc. representative that it may be necessary to interrupt the fire protection service by disconnecting the system and/or a component in the performance of their assigned work.

The undersigned hereby assumes the responsibility for the notification of the authorities at the time the interruption is initiated and will take all of the precautions deemed necessary during this period of interruption and hold harmless Fire Service Inc. and its employees regarding interruption of the protection service during their service of the equipment.

TIME

DATE

NAME

SERVICE PERFORMED & REMAINING: PREV. MAINTENANCE / SENSITIVITY TEST OF SMOKE DETECTORS CLASS E FIRE SYSTEM IN FLOORS 33 & 32ND AREAS ABOVE LISTED SYSTEM CHECKED/RESETED.

(A) INACCESSIBLE (B) MISSING (C) DEFECTIVE (D) OTHER

FIRE SERVICE INCORPORATED

22371

Subsidiary of Firecom, Inc.
39-27 Fifty Ninth Street
Woodside, New York 11377
(718) 899-2311

REPORT OF FIELD SERVICE

LOCATIONS | **DEVICES**

FLOOR	AREAS			CABLE	XTNDR	SENS TEST	CLEANED
35	ELECT	A-B	(2)	2	196	3.0	✓
	COMM	A-B	(2)	2	196	3.2/B0	✓
	TELEPH	A-B	(2)	2	196	3.2/B0	✓
	ELECT	C		4	049	3.2	✓
	ELECT	D		4	049	3.0	✓
	ELECT	F		4	049	3.2	✓
	ELECT	F1		4	049	3.0	✓
	ELECT	G/SEC.	(2)	4	073	3.0	✓
	FREIGHT ELEV			2	012	3.0	✓
	PASS ELEV MAIN			2	012	3.0	✓
	ELEV	SHUTTLE		4	001	3.0	✓
	W. MEZ	AREA		4	025	3.0	✓
	W. MEZ	D/D		4	097	3.2	✓
34	ELECT	A-B	(2)	2	194	3.0	✓
	COMM	A-B	(2)	2	194	3.0	✓
(A)	TELEPH	(A) B	(2)	2	194	3.0	✓
	ELECT	C-D	(2)	2	193	3.2/B0	✓
	ELECT	DW		2	193	3.0	✓
	ELECT	F		4	048	3.2	✓
	ELECT	F1/AV	ROOM	4	048	3.0	✓
	ELECT	G/SEC.	(2)	4	072	3.0	✓
	TELEPH	C-D	(2)	2	193	3.0	✓
	MEDICAL	OFFICE	AREA	2	193	3.0	✓
	PASS ELEV.	MAIN		2	011	3.0	✓
	FREIGHT ELEV.			2	011	3.2	✓
	SHUTTLE ELEV.			4	000	3.0	✓
	CORE MEZ	AREA	(3)	2	252	3.2	✓
	CORE MEZ	DUCT	(2)	2	251	3.2	✓
	W. MEZ	AREA		4	024	3.2	✓
	W. MEZ	D/D		4	096	3.2	✓
#	TELEPH	(A)	34TH.	N/A	(BLOCKED ENTRANCE		
+	EXH.	UNIT	KITCHEN	N/A.	PENDING. +		

INVOICE TO: 7 W.T.C.

N.Y.C

SERVICEMAN ASSIGNED	SEE AT JOB SITE
J. TORRES / F. ROSARIO	F.S.I.
CONTRACT #	**TYPE OF SYSTEM**
S/C 00 818	8500
FEE SERVICE #	**P.O. #**
CALL AUTHORIZED BY	**PHONE** / **EXT**

DATE SCHEDULED: 11-29-00

☒ MAINTENANCE ☐ TEST

☒ JOB COMPLETE ☐ JOB INCOMPLETE

☐ SYSTEM ON LINE ☐ SYSTEM OFF LINE

DEPARTED SHOP	TIME IN	TIME OUT	RETURNED SHOP	TOTAL HOURS
AM PM	800 AM PM	1430 AM PM	AM PM	

MATERIAL RECORD

QUANTITY	DESCRIPTION	COST
	PREVENTIVE MAINTENANCE CONTRACT	

CUSTOMER NAME (PRINT): SILVERSTEIN

CUSTOMER SIGNATURE

SERVICEMAN SIGNATURE

AUTHORIZATION FOR FIRE ALARM INTERRUPTION
The undersigned has been advised by Fire Service Inc. representative that it may be necessary to interrupt the fire protection service by disconnecting the system and/or a component in the performance of their assigned work.
The undersigned hereby assumes the responsibility for the notification of the authorities at the time the interruption is initiated and will take all of the precautions deemed necessary during this period of interruption and hold harmless Fire Service Inc. and its employees regarding interruption of fire protection service during their service of the equipment.

NAME DATE TIME

SERVICE PERFORMED & REMAINING: PREV. MAINTENANCE ON SMOKE DETECTION ON FLOORS 35/34TH AREAS LISTED ABOVE - SENSITIVITY TEST / UNIT ALARMED PROPERLY - SYSTEM BACK TO NORMAL -

NOTE: (1) UNIT D/D EXHAUST TO BE DONE / 34TH FL. -

(A) INACCESSIBLE (B) MISSING (C) DEFECTIVE (D) OTHER

FIRE SERVICE INCORPORATED

22370

Subsidiary of Firecom, Inc.
39-27 Fifty Ninth Street
Woodside, New York 11377
(718) 899-2311

REPORT OF FIELD SERVICE

LOCATIONS | **DEVICES**

INVOICE TO: T.W.T.C.
N.Y.C.

FLOOR	AREA'S.			CABLE	ADDR.	SENS. TEST	S/D
37	ELEC	A-B	(2)	2	200	3.0	BRK
	COMM	A-B	(2)	2	200	3.2/3.0	BRK
	TELEPH	A-B	(1)	2	200	3.0/3.2	BRK
	ELECT	C-D	(2)	2	199	3.0	BRK
	ELECT	D.W		2	199	3.2	BRK
	ELECT	F		4	051	3.0	PEC3
	ELECT	G/SEC.	(2)	4	075	3.0	PEC3
	TELEPH	C-D	(2)	2	199	3.0	BRK
	COMM	C		2	199	3.2	BLK
	PASS	ELEV.		2	014	3.0	BLK
	FREIGHT	ELEV		2	014	3.2	BLK
	ELEV.	SHUTTLE		4	003	3.0	PEC3
	CORE MEN	AREA	(3)	2	258	3.2	PEC3T
	CORE MEN	D/D	(2)	2	251	3.2	SIF24
	W. MEN	AREA	(2)	4	027	3.0	PEC3T
	W. MEN	D/D	(2)	4	099	3.2	EDWIS
36	ELECT	A-B	(2)	2	198	3.0	BLK
	COMM	A-B	(2)	2	198	3.0	BRK
	TELEPH	A-B	(2)	2	198	3.0	BRK
	ELECT	C-D	(2)	2	197	3.0	BRK
	ELECT	F		4	050	3.0	PEC3
	ELECT	D.W		2	197	3.0	BLK
	ELECT	G/SEC	(2)	4	074	3.0	PEC3
	TELEPH	C.D (COMM)	(2)	2	197	3.2	BLK
	COMM	PASSAGE	@	2	197	3.0	BLK
	PASS	ELEV		2	013	3.0	BLK
	FREIGHT	ELEV.		2	013	3.2	BLK
	SHUTTLE	ELEV.		4	002	3.2	PEC3
	CORE MEN	AREA	(3)	2	256	3.0	PEC3T
	CORE MEN	D/D	(2)	2	255	3.2	SIF24
	W. MEN	AREA	(2)	4	026	3.2	PEC3T
	W. MEN	BASKET	DET	4	098	3.4	EDWIS
	W. MEN	D/DET		4	098	3.2	EDWIS

SERVICEMAN ASSIGNED: J. TORRES / F. ROSARIO

SEE AT JOB SITE: F.S.I.

DATE SCHEDULED: 11.28.00

CONTRACT #: S/C 00818

TYPE OF SYSTEM: CSN 2000

FEE SERVICE #:

P.O. #:

CALL AUTHORIZED BY | PHONE | EXT

☒ MAINTENANCE ☐ TEST

☐ JOB COMPLETE ☐ JOB INCOMPLETE

☐ SYSTEM ON LINE ☐ SYSTEM OFF LINE

DEPARTED SHOP	TIME IN	TIME OUT	RETURNED SHOP	TOTAL HOURS
AM PM	800 AM PM	430 AM PM	AM PM	

MATERIAL RECORD

QUANTITY	DESCRIPTION	COST
	PREVENTIVE MAINTENANCE CONTRACT	

CUSTOMER NAME (PRINT): SILVERSTEIN

CUSTOMER SIGNATURE

SERVICEMAN SIGNATURE

AUTHORIZATION FOR FIRE ALARM INTERRUPTION
The undersigned has been advised by Fire Service Inc. representatives that it may be necessary to interrupt the fire protection service by disconnecting the system and/or a component in the performance of their assigned work.
The undersigned hereby assumes the responsibility for the notification of the authorities at the time the interruption is initiated and will take all of the precautions deemed necessary during this period of interruption and hold harmless Fire Service Inc. and its employees regarding interruption of the protection service during their service of the equipment.

NAME DATE TIME

SERVICE PERFORMED & REMAINING: S/ CONTRACT - PREV. MAINTENANCE SMOKE DETECTION ON FLOORS 37/36 AS LISTED ABOVE AS PER SPECIFIC SPRINKLER BOTTOM FLOOR - SENSITIVITY TEST - SYSTEM OK WHERE PROPERLY

(A) INACCESSIBLE (B) MISSING (C) DEFECTIVE (D) O

FIRE SERVICE INCORPORATED

22369

Subsidiary of Firecom, Inc.
39-27 Fifty Ninth Street
Woodside, New York 11377
(718) 899-2311

REPORT OF FIELD SERVICE

LOCATIONS | **DEVICES**

FLOOR	AREA'S			CABK	XTNDR	S/D	SENS TST
39	ELECT	A-B	(2)	242	205	BLK	3.0
	COMM	A-B	(2)	242	205	BRK	3.0
	TELEPH	A-B	(2)	242	205	BRK	3.2/30
	ELECT	C		242	204	BLK.	
	ELECT	D.W.		242	204	BLK	
	ELECT	D1		242	204	BRK	
	ELECT	F		246	053	PEC3	
	ELECT	6/SEC	(2)	246	077	PEC3	
	FREIGHT	ELEV		242	016	BRK	
	PASS	ELEV. MAIN		242	016	BLK	
	ELEV.	SHUTTLE		246	005	PEC3	
	RECPTN	CEILING	DUCT	242	254	Apllo	
	RECPTN	CEILING	DUCT	242	254	Apllo	
	RECEPTN	"	DUCT	242	254	Apllo	
	RECEPTN	"	DUCT	242	254	Apllo	
	RECEPTN	"	DUCT	242	254	Apllo	
	CORE	HER AREA		243	~~006~~	~~Apllo~~ PEC3	
	CORE	HER AREA		243	006	~~Apllo~~ PEC3	
	CORE	HER AREA		243	006	PEC3	
	CORE	DUCT DET.		243	007	Hochki	
	CORE	DUCT DET		243	007	Hochki	
	WEST	HER AREA		246	029	PEC3T	
	W. HER.	DUCT DET.		246	101	EDW35	
38	W HER	CEILING AREA		246	~~006~~ 026	PEC3T	
38	W. HER	DUCT DET.		246	127	EDW35	

AUDITORIUM (39)

PREVENTIVE MAINTENANCE CONTRACT

INVOICE TO:
T.W.T.C.
N.Y.C.
(Solomon/Smith Barney)

SERVICEMAN ASSIGNED	SEE AT JOB SITE
J. Torres F. Rosario	F.S.I.
	DATE SCHEDULED: 11-21-00
CONTRACT #	TYPE OF SYSTEM: LSN 50
FEE SERVICE #	P.O. #
CALL AUHTORIZED BY	PHONE / EXT

☒ MAINTENANCE ☐ TEST
☐ JOB COMPLETE ☐ JOB INCOMPLETE
☐ SYSTEM ON LINE ☐ SYSTEM OFF LINE

DEPARTED SHOP	TIME IN	TIME OUT	RETURNED SHOP	TOTAL HOURS
AM PM	900 AM PM	430 AM PM	AM PM	

MATERIAL RECORD

QUANTITY	DESCRIPTION	COST
	PREVENTIVE MAINTENANCE CONTRACT	

CUSTOMER NAME (PRINT): Sean O'Keefe
CUSTOMER SIGNATURE:
SERVICEMAN SIGNATURE:

AUTHORIZATION FOR FIRE ALARM INTERRUPTION
The undersigned has been advised by Fire Service Inc. representative that it may be necessary to interrupt the fire protection service by disconnecting the system and/or a component in the performance of their assigned work.
The undersigned hereby assumes the responsibility for the notification of the authorities at the time the interruption is initiated and will take all of the precautions deemed necessary during the period of interruption and hold harmless Fire Service Inc. and its employees regarding interruption of fire protection service during their service of the equipment.

TIME
DATE
NAME

SERVICE PERFORMED & REMAINING

Prev. Maintenance Smoke detectors on 39th flr as listed above and 38 floor Proprietary line W. HER Family. - Satisfactory Test upon Restoring Back to operating

(A) INACCESSIBLE (B) MISSING (C) DEFECTIVE (D) OTHER

FIRE SERVICE INCORPORATED

22368

Subsidiary of Firecom, Inc.
39-27 Fifty Ninth Street
Woodside, New York 11377
(718) 899-2311

REPORT OF FIELD SERVICE

LOCATIONS		DEVICES				
FLOOR	AREA'S	CABLE	XTNDR	S/D	SENS TEC	
39/38	W. MEZ AREA. AUDITY	246	046	PEC3T	3.0	
39/38	W. MEZ DID AUDITH	246	127	EDWDS	3.2	
	ELECT A-B (2)	242	202	BRK	3.0	
	TELEPH A-B (2)	242	202	BRK	3.0	
	COMM A-B (2)	242	202	BRK	3.0	
	ELECT C-B (1)	242	203	BRK	3.0	
	ELECT D- (1)	242	203	BRK	3.2	
	ELECT D.W.	242	203	EDWDS	2-8	
	ELECT F	246	052	PEC3	2-9	
	ELECT G	246	076	PEC3	2-8	
	SECURITY CLOSET	246	076	PEC3	2-8	
	PASS ELEV. MAIN	242	015	BLK	3.0	
	FREIGHT ELEV.	242	015	BLK	3.2	
	ELEV. PASS SHAFT	246	004	PEC3	3.0	
	CORE MEZ AREA	243	004	PEC3T	3.0	
	" " "	243	004	PEC3T	3.0	
	" " "	243	004	PEC3T	3.0	
	CORE MEZ DUCT	243	005	HOOKI	3.2	
	CORE MEZ DUCT	243	005	HOOKI	3.2	
	W. MEZ AREA	246	028	PEC3T	3.0	
38	W. MEZ DUCT	246	0100	HOOKI	3.2	
			—	EDWDS	—	

PREVENTIVE MAINTENANCE CONTRACT

INVOICE TO:
T.W.T.C.
N.Y.C.

SERVICEMAN ASSIGNED: J. TORREY / F. ROSARIO	SEE AT JOB SITE: F.S.I.
CONTRACT #	DATE SCHEDULED: 11-22-00
FEE SERVICE #	TYPE OF SYSTEM: LSN 2000
CALL AUHTORIZED BY	P.O. #
PHONE	EXT

☑ MAINTENANCE ☐ TEST
☐ JOB COMPLETE ☐ JOB INCOMPLETE
☐ SYSTEM ON LINE ☐ SYSTEM OFF LINE

DEPARTED SHOP	TIME IN	TIME OUT	RETURNED SHOP	TOTAL HOURS
8:00 AM PM	9:00 AM PM	1:30 AM PM	AM PM	

MATERIAL RECORD

QUANTITY	DESCRIPTION	COST

CUSTOMER NAME (PRINT): Sean O'Keefe.
CUSTOMER SIGNATURE:
SERVICEMAN SIGNATURE: J. Torrey F. Rosario

SERVICE PERFORMED & REMAINING: Routine Service Contract

PREV. MAINTENANCE on SMOKE DETECTION UNITS on 38th FL. Used 4 SYSTEM RESET / TEST - Back to operation

AUTHORIZATION FOR FIRE ALARM INTERRUPTION
The undersigned has been advised by Fire Service Inc. representative that it may be necessary to interrupt the fire protection service by disconnecting the system and/or a component in the performance of their assigned work.
The undersigned hereby assumes the responsibility for the notification of the authorities at the time the interruption is initiated and will take all of the precautions deemed necessary during this period of interruption and hold harmless Fire Service Inc. and its employees regarding interruption of fire protection service during their service of the equipment.

NAME DATE TIME

(A) INACCESSIBLE (B) MISSING (C) DEFECTIVE (D) OTHE

FIRE SERVICE INCORPORATED

22366

Subsidiary of Firecom, Inc.
39-27 Fifty Ninth Street
Woodside, New York 11377
(718) 899-2311

REPORT OF FIELD SERVICE

LOCATIONS | **DEVICES**

FLOOR	AREA'S			PANEL	ADDR	S/D	SENS
41	PASS ELEV			2	018	BRK	3.2
	FREIGHT ELEV			2	018	BRK	3.0
	PASS SHUTTLE			4	007	PEC3	3.0
	ELECT	A-B	(2)	2	209	BRK	3.0/3.0
	COMM	A-B	(2)	2	209	BRK CDMA	3.0/3.0
	TELEPH	A-B	(2)	2	209	BRK	3.0/3.0
	TELEPH	C-D	(2)	2	195	Apllo	2.8
	COMM	C-D	(2)	2	195	Apllo	2.8
	ELECT	C-D	(2)	2	195	Apllo	2.8
	'G' / SECURITY		(2)	4	079	PEC3	3.0/3.0
	H.E.R.	AREA	(2)	2	019	Apllo	2.8
	H.E.R.	D/DET.	(2)	2	016	Apllo	3.0
40	PASS ~~FREIGHT~~			2	017	BRK	3.0
*	FREIGHT - (BURIED)			2	017	BRK	3.0
	SHUTTLE ELEV.			4	006	PEC3	2.8
	AREA ELECT	A-B	(2)	2	207	BRK	3.0
	COMM	A-B	(2)	2	207	BRK	3.0
	TELEPH	A-B	(2)	2	207	BRK	3.0
	TELEPH	C-D	(2)	2	206	Apllo	2.6
	COMM	C-D	(2)	2	206	Apllo	2.8
	ELECT	C-D	(2)	2	206	Apllo	2.6
	H.E.R.	AREA	(2)	2	208	Apllo	2.8
	H.E.R.	D/D	(2)	2	015	Apllo	2.8
	FILE RM	AREA	Solomon	4	258	Apllo	2.8
	FILE RM	AREA	Solomon	4	251	Apllo	2.8
	'G' ELECT.			4	078	PEC3	2.8
	SECURITY			4	078	PEC3	2.8

PREVENTIVE MAINTENANCE CONTRACT

INVOICE TO: JWTC N.Y.C. (Solomon)

SERVICEMAN ASSIGNED: J. TORRES / F. ROSARIO

SEE AT JOB SITE: F.S.I.

DATE SCHEDULED: 11-15-00

CONTRACT #: S/C 00 818

TYPE OF SYSTEM: LSN 2000

FEE SERVICE #:

P.O. #:

CALL AUHTORIZED BY | PHONE | EXT

☑ MAINTENANCE ☑ TEST

☐ JOB COMPLETE ☐ JOB INCOMPLETE

☐ SYSTEM ON LINE ☐ SYSTEM OFF LINE

DEPARTED SHOP	TIME IN	TIME OUT	RETURNED SHOP	TOTAL HOURS
AM PM	800 AM PM	430 AM PM	AM PM	

MATERIAL RECORD

QUANTITY	DESCRIPTION	COST

CUSTOMER NAME (PRINT)

CUSTOMER SIGNATURE

SERVICEMAN SIGNATURE

AUTHORIZATION FOR FIRE ALARM INTERRUPTION
The undersigned has been advised by Fire Service Inc. representative that it may be necessary to interrupt the fire protection service by disconnecting the system and/or a component in the performance of their assigned work.
The undersigned hereby assumes the responsibility for the notification of the authorities at the time the interruption is initiated and will take all of the precautions deemed necessary during the period of interruption and hold harmless Fire Service Inc. and its employees regarding interruption of the protection service during their service of the equipment.

NAME DATE TIME

SERVICE PERFORMED & REMAINING: Prev. Maintenance. Service Contract - On Smoke Detection Class E System on Floor's 41 + 40 (Solomon Smith Barney) on Area (Book Listing). -

(*) Smoke Detector 40th Fl Freight Area Buried top Ceiling above Tiles

(A) INACCESSIBLE - Must be Exposed. - (B) MISSING (C) DEFECTIVE (Finest Elect/Solomon) - (D) OTHER

FIRE SERVICE INCORPORATED

22367

Subsidiary of Firecom, Inc.
39-27 Fifty Ninth Street
Woodside, New York 11377
(718) 899-2311

REPORT OF FIELD SERVICE

LOCATIONS | **DEVICES**

FLOOR				Code	XTNDR	S/D	Sens.
42	Pass Elev.			2	019	BLK	3.0
*	FREIGHT ELEV (BURIED)			2	019	BLK.	3.2
	SHUTTLE Pass.			4	008	PEC3	3.0
	TELEPH	A		2	211	BLK	3.0
	ELECT	A		2	211	BLK	3.0
	COMM	A		2	211	BLK	3.2
	COMM	B		2	211	BLK	3.0
	ELECT	B		2	211	BLK	3.0
	TELEPH	B		2	211	BLK	3.2
	TELEPH	C		2	210	Apllo	3.0
	ELECT	C		2	210	Apllo	3.0
	COMM	C		2	210	Apllo	2.8
	COMM	D		2	210	Apllo	2.8
	ELECT	D		2	210	Apllo	3.0
	TELEPH	D		2	210	Apllo	2.8
	MER	AREA		2	212	Apllo	2.8
	MER	AREA		2	212	Apllo	2.8
	MER	D/D		2	017	Apllo	2.8
	MER	D/D		2	017	Apllo	2.8
	6 ELECT.			4	080	PEC 3	2.8
	SECURITY closet			4	080	PEC 3	3.0
	'F' ELECT. → MISSING S/D / NO WIRING						
(#)	ASISTED FIRECOM KENNY WALL / RICK FINDING						
	ON CHECK'S for FAN'S SHUTDOWN /						
	ACTIVATIONS on 18 FF Chart / ALL ODL SYSTEM						

PREVENTIVE MAINTENANCE CONTRACT

INVOICE TO: W.T.C

N.Y.C

SERVICEMAN ASSIGNED	SEE AT JOB SITE
J. TORRES	F.S.I.
F. ROSARIO	DATE SCHEDULED 11-14-00
CONTRACT # S/C 00 818	TYPE OF SYSTEM 850 V
FEE SERVICE #	P.O. # LSN 2000
CALL AUHTORIZED BY	PHONE / EXT

☑ MAINTENANCE ☐ TEST
☐ JOB COMPLETE ☐ JOB INCOMPLETE
☐ SYSTEM ON LINE ☐ SYSTEM OFF LINE

DEPARTED SHOP	TIME IN	TIME OUT	RETURNED SHOP	TOTAL HOURS
AM PM	8:00 AM PM	5:00 AM PM	AM PM	

MATERIAL RECORD

QUANTITY	DESCRIPTION	COST

CUSTOMER NAME (PRINT)

CUSTOMER SIGNATURE

SERVICEMAN SIGNATURE Frank Lopez

AUTHORIZATION FOR FIRE ALARM INTERRUPTION
The undersigned has been advised by Fire Service Inc. representative that it may be necessary to interrupt the fire protection service by disconnecting the system and/or a component in the performance of their assigned work.
The undersigned hereby assumes the responsibility for the notification of the authorities at the time the interruption is initiated and will take all of the precautions deemed necessary during this period of interruption and hold harmless Fire Service Inc. and its employees regarding interruption of the protection service during their service of the equipment.

NAME DATE TIME

SERVICE PERFORMED & REMAINING S/CONTRACT -
CONTRACT PREV. MAINTENANCE ON SMOKE DETECTING DEVICE & SYSTEM. -
FIRECOM LSN 2000 MODEL - SENSITIVITY TEST / SEPARATELY. -
ON FLOOR'S LISTED ABOVE / ABOVE. -
(#) NOTE: FREIGHT ELEV. S/D. (BURIED) ABOVE CEILING TILES. - MUST BE REMOVED / EXPOSED CEILING - (FOREST ELECT / SOLOMON). -

(A) INACCESSIBLE (B) MISSING (C) DEFECTIVE (D) OTHER

FIRE SERVICE INCORPORATED

: 22365

Subsidiary of Firecom, Inc.
39-27 Fifty Ninth Street
Woodside, New York 11377
(718) 899-2311

REPORT OF FIELD SERVICE

LOCATIONS			DEVICES			
FLOOR			Code	S/D	Sens Test
46	Elect	B	2	DAK	
	Comm	D	2	DAK	
	Freight	Elev	2	DAK	
	Elect	D	4	Pec3	
	Sec.	Closet	1	DI3	
	Elect	A	1	DAK	
	Comm	A	1	DAK	
	Teleph	A	2	DAK	
	Teleph	D	2	DAK	
	Elect	D	2	DAK	
	Comm	D	2	DAK	
	Sec.	W Shuttle	4	Pec3	
	Elec.	E Shuttle	4	Pec3	
	CODE	MER D/D (2)	2	Pec3T	
	CODE	MER Area (3)	2	Pec3T	
	Elect	F	4	Pec3	
	Elect	C	2	Pec3	
	Elevator	Shuttle	4	Pec3	
43	Freight	Pass (2)	2	DAK	
	Elect	A+B (2)	2	DAK	
	Teleph	A+B (2)	2	DAK	
	Comm	A+B (2)	2	DAK	
	Elect	E	4	DAK	
	Security		4	Pec3T	
	Shuttle	Elev	4	Pec3T	
	East	MER D/D	4	Apollo	
	East	MER Area	4	Apollo	

Note F Elect NOT S/D

Note Code 213 ON 43RD in Shuttle

INVOICE TO: 7WTC
NYC

SERVICEMAN ASSIGNED	SEE AT JOB SITE
F. Rosario	F.S.D.
Lineer	DATE SCHEDULED 11-8-2000
CONTRACT # Sco818	TYPE OF SYSTEM 8500
FEE SERVICE #	P.O. #
CALL AUTHORIZED BY	PHONE / EXT

☒ MAINTENANCE ☒ TEST
☐ JOB COMPLETE ☐ JOB INCOMPLETE
☐ SYSTEM ON LINE ☐ SYSTEM OFF LINE

DEPARTED SHOP	TIME IN	TIME OUT	RETURNED SHOP	TOTAL HOURS
AM PM	8:00 AM PM	4:30 AM PM	AM PM	

MATERIAL RECORD

QUANTITY	DESCRIPTION	COST
	PREVENTIVE MAINTENANCE CONTRACT	

CUSTOMER NAME (PRINT)
CUSTOMER SIGNATURE Sean O'Keeffe
SERVICEMAN SIGNATURE Frank Lopez Linero

AUTHORIZATION FOR FIRE ALARM INTERRUPTION
The undersigned has been advised by Fire Service Inc. representative that it may be necessary to interrupt the fire protection service by disconnecting the system and/or a component in the performance of their assigned work.
The undersigned hereby assumes the responsibility for the notification of the authorities at the time the interruption is initiated and will take all of the precautions deemed necessary during this period of interruption and hold harmless Fire Service Inc. and its employees regarding resumption of the protection service during their service of the equipment.

NAME DATE TIME

SERVICE PERFORMED & REMAINING

Service Contract
Preventive Maintenance Check on Sensitivity Test ON
Smoke Detectors Units on 46th and 43rd
Floors Satisfactory Smith Bros

(A) INACCESSIBLE (B) MISSING (C) DEFECTIVE (D) OTHER

FIRE SERVICE INCORPORATED

SUBSIDIARY OF FIRECOM INC
39-27 FIFTY NINTH STREET
WOODSIDE, NEW YORK 11377
(718) 899-2311

55015

REPORT OF FIELD SERVICE

INVOICE TO

SERVICED
7 WORLD TRADE
& M 4 M 4

CALL AUTHORIZED BY	CONTRACT #	FEE SERVICE #	FJ #	P O #	SEE AT JOB SITE
SHOP	SC 818				F.S.D

PHONE	EXT	DATE SCHEDULED	TIME SCHEDULED	SERVICEMAN ASSIGNED
		11-1-00	AM	C Blyth

MATERIAL RECORD

QUANTITY ISSUED	QUANTITY B/O	F C I NO	DESCRIPTION	UNIT PRICE	PER	TOTAL AMOUNT
			PREVENTIVE MAINTENANCE CONTRACT			

CHECK APPROPRIATE BOX

- ☐ Q.C
- ☐ I & T
- ☐ FEE CALL
- ☐ DELIVERY
- ☐ DEMO
- ☐ EMERGENCY CALL
- ☒ CONTRACT CALL
- ☐ PICK UP
- ☐ DEMO OWNER
- ☐ SURVEY

DEPARTED SHOP	TIME IN	TIME OUT	RETURNED SHOP	TOTAL HOURS	START MILEAGE	END MILEAGE	MISC EXPENSE	CAR FARE
800 AM	900 AM	400 PM	430 PM					

☐ MAT REQD ☐ PARTIAL
☐ OTHER ☐ LABOR REQD

I & T COMPLETE ☐ CALL COMPLETE ☐

SERVICE DATE: 11-1-00

WILL RETURN ON

CUSTOMER SIGNATURE: [signature]

SERVICEMAN SIGNATURE: Calvin Blyth

AUTHORIZATION FOR FIRE ALARM INTERRUPTION

The undersigned has been advised by Fire Service, Inc. representative that it may be necessary to interrupt the fire protection service by disconnecting the system and/or a component in the performance of their assigned work.

The undersigned hereby assumes the responsibility for the notification of the authorities at the time the interruption is initiated and will take all of the precautions deemed necessary during the period of interruption and hold harmless Fire Service Inc. and its employees regarding interruption of fire protection service during their service of the equipment.

Date

PROBLEM—AS DESCRIBED: SERVICE CONTRACT

SERVICE PERFORMED: ASSIST TECH WITH TESTING ON AREA SMOK DETECTOR, AND DUCT SMOKE DETECTOR FLOOR WORK ON WAS 45, 44 and 46 Floor.

WORK REMAINING

FIRE SERVICE INCORPORATED

22361

Subsidiary of Firecom, Inc.
39-27 Fifty Ninth Street
Woodside, New York 11377
(718) 899-2311

REPORT OF FIELD SERVICE

LOCATIONS | **DEVICES**

INVOICE TO: T.W.T.C
N.Y.C.

FLOOR				CABLE	ADDRESS	S/D	SENS TEST
47	ELECT	A	CLOSET	2	222	BRK.	3.0
	ELECT	B	"	2	222	BRK	3.0
	ELECT	C	"	2	223	BRK	3.2
	ELECT	F	"	4	061	PEC3	3.0
	ELECT	G	"	4	035	PEC 3	2.8
	TELEPH	B	"	2	222	BRK	3.0
	B STAIRWAY			2	221	EDWDS	3.2
	TELEPH	A	CLOSET	2	222	BRK	3.0
	COMM	D	"	2	223	BRK	3.0
	CUSHMAN OFFICE		AREA	4	113	EDWDS	3.0
	SHAFT/VERTICAL		CONVYR	4	068	EDWDS	3.0
	SECURITY		CLOSET	4	221	EDWDS	3.0
	ELEVATOR SHAFT		RE	4	016	PEC3T	2.8
	WEST MEZ			4	069	EDWDS	3.0
	W. MEZ D/D. 47-1			4	115	EDWDS	3.0
	CORE MEZ		D/D	2/023	279	PEC3T	3.0
	CORE MEZ		AREA	2/021	278	PEC3	3.2
	CORE MEZ		AREA	2 022/278		PEC3	3.2
	CORE MEZ		AREA	2-022/278		PEC3	3.0
47	A STAIR/ELEV S/D			2	024	BRK	3.0
48	D/D.	EF	2	4	117	EDWDS	3.2
48	D/D	AC	1	4	118	EDWDS	3.0
48	D/D	AC	2	4	118	D13B	3.2
	UNITS	REPLACED/DUE TO FALSE ACTIVATION. — RETESTED BACK TO OPERATION. —					
45	RETEST S/PE - STROBE AS PER FOREST ELECT. REQUEST. —						
24	DOOR RELEASE CHECK AS PER BLD/ ENTRANCE GLASS DOORS. —						

SERVICEMAN ASSIGNED: J. Jones / F. Rosario
SEE AT JOB SITE: F.S.D.
DATE SCHEDULED: 11-01-00
CONTRACT #: S/C00818
TYPE OF SYSTEM: 8500
FEE SERVICE #:
P.O. #: LSW2000
CALL AUHTORIZED BY | PHONE | EXT

☐ MAINTENANCE ☐ TEST
☐ JOB COMPLETE ☐ JOB INCOMPLETE
☐ SYSTEM ON LINE ☐ SYSTEM OFF LINE

DEPARTED SHOP	TIME IN	TIME OUT	RETURNED SHOP	TOTAL HOURS
AM PM	8:00 AM PM	4:30 AM PM	AM PM	

MATERIAL RECORD

QUANTITY	DESCRIPTION	COST
	PREVENTIVE MAINTENANCE CONTRACT	

CUSTOMER NAME (PRINT)
CUSTOMER SIGNATURE
SERVICEMAN SIGNATURE

AUTHORIZATION FOR FIRE ALARM INTERRUPTION
The undersigned has been advised by Fire Service Inc. representative that it may be necessary to interrupt the fire protection service by disconnecting the system and/or a component in the performance of their assigned work.
The undersigned hereby assumes the responsibility for the notification of the authorities at the time the interruption is initiated and will take all of the precautions deemed necessary during this period of interruption and hold harmless Fire Service Inc. and its employees regarding interruption of fire protection service during their service of the equipment.

TIME
DATE
NAME

SERVICE PERFORMED & REMAINING: Service Contract As Above Listed Floors 47th All Area S/Detectors Sensitivity Test / Maintenance Also Test / Repairs Check Spk / Strobe 45th As Forest Request. Dub 24 Fl. door release as per BLD Mgt. Requested. —

S/C to Continue —

(A) INACCESSIBLE (B) MISSING (C) DEFECTIVE (D) OTHER

FIRE SERVICE INCORPORATED

22363

Subsidiary of Firecom, Inc.
39-27 Fifty Ninth Street
Woodside, New York 11377
(718) 899-2311

REPORT OF FIELD SERVICE

LOCATIONS			DEVICES			
FLOOR	PLANT		CABLE	XMTR	S/D	SENS TEST
48	Area Ceiling		4	086	PEC3T	3.0
	"		4	086	PEC3T	3.0
	"		4	086	PEC3T	3.0
	"		4	086	PEC3T	3.0
	"		4	086	PEC3T	3.2
	"		4	086	PEC3T	3.0
48	D/DETECTION 48-1 AHU		4	070	EDW3S	3.4
48	"	48-1 TR	4	116	EDW3S	3.2
48	"	EF-1	4	112	EDW3S	3.4
48	"	EF-2	NO ACCESS AT THIS TIME			
48	"	AR 1		"	N/A	
48	"	AR 2		"	N/A	
44	ELECT G		4	082	PEC3	3.0
	ELECT A		2	215	BRK	3.2
	ELECT B		2	215	BRK	3.0
	TELEPH A		2	215	BRK	3.2
	TELEPH B		2	215	BRK	3.0
	COMM B		2	215	BRK	3.2
	COMM A		2	215	BRK	3.0
	FREIGHT ELEV		4	021	BRK	3.0
44	PASS. ELEV. MAIN		4	021	BRK	3.0
	ELEV. PASS SHUTTLE		4	010	PEC3	3.2
	ELEV PASS SHUTTLE		4	018	PEC3	3.2
	SECURITY CLOSET		4	082	PEC3	3.0
	W. MER AREA		4	034	PEC3T	3.2
	W. MER DVD		4	112	EDW3S	3.4

PREVENTIVE MAINTENANCE CONTRACT

INVOICE TO: 2 W.T.C.
N.Y.C.
(Stewart Brittel)

SERVICEMAN ASSIGNED: J. Tower / F. Rosario
SEE AT JOB SITE: F.S.I
DATE SCHEDULED: 10-31-00
CONTRACT #: S/C 00 818
TYPE OF SYSTEM: 8500
FEE SERVICE #:
P.O. #:
CALL AUHTORIZED BY:
PHONE:
EXT:

☒ MAINTENANCE ☐ TEST
☐ JOB COMPLETE ☒ JOB INCOMPLETE
☐ SYSTEM ON LINE ☐ SYSTEM OFF LINE

DEPARTED SHOP	TIME IN	TIME OUT	RETURNED SHOP	TOTAL HOURS
AM PM	8:00 AM PM	4:30 AM PM	AM PM	

AUTHORIZATION FOR FIRE ALARM INTERRUPTION
The undersigned has been advised by Fire Service Inc. representative that it may be necessary to interrupt the fire protection service by disconnecting the system and/or a component in the performance of their assigned work.
The undersigned hereby assumes the responsibility for the notification of the authorities at the time the interruption is initiated and will take all of the precautions deemed necessary during this period of interruption and hold harmless Fire Service Inc. and its employees regarding interruption of fire protection service during their service of the equipment.

NAME DATE TIME

X

MATERIAL RECORD

QUANTITY	DESCRIPTION	COST

CUSTOMER NAME (PRINT)
CUSTOMER SIGNATURE
SERVICEMAN SIGNATURE

SERVICE PERFORMED & REMAINING: Preventive Maintenance / Sensitivity Test / Cleaned Smoke Units on 48'th H.E.R. Plant - As Listed. - (3) Ducts Detecting Pending Service / Need an Asst / Access. - Also Security 44° Areas / As Listed. - System Quickmeter LSN 2000 Model. -

(A) INACCESSIBLE (B) MISSING (C) DEFECTIVE (D) OTHER

FIRE SERVICE INCORPORATED

97635

SUBSIDIARY OF FIRECOM INC.
39-27 FIFTY NINTH STREET
WOODSIDE, NEW YORK 11377
(718) 899-2311

REPORT OF FIELD SERVICE

INVOICE TO

SERVICED
7 W.T.C.
N.Y.C.

CALL AUTHORIZED BY		CONTRACT #	FEE SERVICE #	FJ #	P O #	SEE AT JOB SITE
		SPC 00818				F.S.I.
PHONE	**EXT**	**DATE SCHEDULED**	**TIME SCHEDULED**			**SERVICEMAN ASSIGNED**
		10-30-00	AM			J. TORRES / F. ROSARIO

MATERIAL RECORD

QUANTITY ISSUED	QUANTITY B/O	F C I NO	DESCRIPTION	UNIT PRICE	PER	TOTAL AMOUNT
			PREVENTIVE MAINTENANCE CONTRACT			

CHECK APPROPRIATE BOX

- ☐ Q.C
- ☐ I & T
- ☐ FEE CALL
- ☐ DELIVERY
- ☐ DEMO
- ☐ EMERGENCY CALL
- ☒ CONTRACT CALL
- ☐ PICK UP
- ☐ DEMO OWNER
- ☐ SURVEY

DEPARTED SHOP	TIME IN	TIME OUT	RETURNED SHOP	TOTAL HOURS	START MILEAGE	END MILEAGE	MISC EXPENSE	CAR FARE
8W	9W	3:30	430					

- ☐ MAT REQD ☐ PARTIAL
- ☐ OTHER ☐ LABOR REQD

SERVICE DATE: 10-30-00

CUSTOMER SIGNATURE

I & T COMPLETE ☐ CALL COMPLETE ☐

WILL RETURN ON

SERVICEMAN SIGNATURE

AUTHORIZATION FOR FIRE ALARM INTERRUPTION

The undersigned has been advised by Fire Service Inc. representative that it may be necessary to interrupt the fire protection service by disconnecting the system and/or a component in the performance of their assigned work.

The undersigned hereby assumes the responsibility for the notification of the authorities at the time the interruption is initiated and will take all of the precautions deemed necessary during the period of interruption and hold harmless Fire Service Inc. and its employees regarding interruption of the protection service during their service of the equipment.

Date

Name

PROBLEM—AS DESCRIBED Service Contract / Maintenance — Repairs —

SERVICE PERFORMED As per Contract check / Repairs on 16 FL. STROBE PANEL AFC 100 Call Mgt. Tracey ext. - Unit Repaired Back to normal. — Also as per F.S.I. check / Repaired 35 FL. AFC 100 STROBE PANEL / Modifications Update P.C. Mother Board. - Rewired Back to operation. — Also check 37 FL. PAGE Trouble / STROBE PNL Trouble. — Condition due to Construction on floor / SPKR'S / STROBES Ceiling Being Removed / Relocated By Forest Elect. / Solomon Brothers. — System Ok / Back to operations —

WORK REMAINING

FCI 155
REV 6186

FIRE SERVICE INCORPORATED

97613

SUBSIDIARY OF FIRECOM INC.
39-27 FIFTY NINTH STREET
WOODSIDE, NEW YORK 11377
(718)899-2311

REPORT OF FIELD SERVICE

INVOICE TO

SERVICED
7 W.T.C.
N.Y.C.

CALL AUTHORIZED BY	CONTRACT #	FEE SERVICE #	FJ #	P O #	SEE AT JOB SITE
R.T.	I/C 60818				F.S.I.

PHONE	EXT.	DATE SCHEDULED	TIME SCHEDULED	SERVICEMAN ASSIGNED
		10-25-00	AM.	J. TORRES / A. ROSARIO

MATERIAL RECORD

QUANTITY ISSUED	QUANTITY B/O	F.C.I. NO.	DESCRIPTION	UNIT PRICE	PER	TOTAL AMOUNT
			PREVENTIVE MAINTENANCE CONTRACT			

CHECK APPROPRIATE BOX

- ☐ O.C
- ☐ I & T
- ☐ FEE CALL
- ☐ DELIVERY
- ☐ DEMO
- ☐ EMERGENCY CALL
- ☑ CONTRACT CALL
- ☐ PICK UP
- ☐ DEMO OWNER
- ☐ SURVEY

DEPARTED SHOP	TIME IN	TIME OUT	RETURNED SHOP	TOTAL HOURS	START MILEAGE	END MILEAGE	MISC EXPENSE	CAR FARE
	900	130						

- ☐ MAT REQD
- ☐ PARTIAL
- ☐ OTHER
- ☐ LABOR REQD

SERVICE DATE: 10-25-00

CUSTOMER SIGNATURE: Sean O'Keeffe

I & T COMPLETE ☐ CALL COMPLETE ☐

WILL RETURN ON

SERVICEMAN SIGNATURE: [signature]

AUTHORIZATION FOR FIRE ALARM INTERRUPTION

The undersigned has been advised by Fire Service Inc. representative that it may be necessary to interrupt the fire protection service by disconnecting the system and/or a component in the performance of their assigned work.

The undersigned hereby assumes the responsibility for the notification of the authorities at the time the interruption is released and will take all of the precautions deemed necessary during the period of interruption and hold harmless Fire Service Inc. and its employees regarding interruption of fire protection service during their service of the equipment.

Date

Name

PROBLEM—AS DESCRIBED Service Contract – Repairs Status –

SERVICE PERFORMED QS per Contract Check Trace) 37th Fl. Page SPK Trouble. (Floor Layer Renovation). – Located Open Unit Power Wires Fixed by Forest Electric. – 37 Floor Page Normalized. – Also proceeded to Assist Firelon Tech Igor to Install Door Release Relay Supv. top TTB Unit Cable #1, 44th Fl. Riser. – Unit Mounted, Wiring Finished. – Check Supv./Release CPKO Indication O.K. – Also proceeded after to Check Printer Unit – RA40 Unit on 44th Security Office – Wiring RA40 to Printer – Software P.C. Driver Unit S/W's Positions – Jumpers – As per Specs – Eng./Firelon. – Unit Down/Point N/S. – Need to Check RA40 Unit – DB-25 Connected Pins

WORK REMAINING (#'s 25/17 O.K.) – Also Check For Acyio Rack Trouble Status – Traced to 796 P.C. Card Open Jumper A5 O.C.P/ALG-11 to AR4-S Repaired O.K. – Trouble Acyio Rack Cleared. –

FCI 155
REV 6186

FIRE SERVICE INCORPORATED

22360

Subsidiary of Firecom, Inc.
39-27 Fifty Ninth Street
Woodside, New York 11377
(718) 899-2311

10/24/00

REPORT OF FIELD SERVICE

LOCATIONS | **DEVICES**

INVOICE TO: J.W.T.C
N.Y.C.

FLOOR	AREA'S			CABLE	XMTR	S/D	SENS TEST
3	TOP ESCALATOR			1	166	BLK	3.0
	TOP ESCALATOR			1	166	BRK	3.2
3RD	ELECT.	'D' (LOCKERS)		1	165	BLK	3.0
	TELEPH	A		1	166	BLK	3.0
	ELECT	A		1	166	BLK	3.0
	CORR	A		1	166	BLK	3.2
	CORRIDOR	B		1	166	BLK	3.2
	CORR	B		1	166	BLK	3.2
3	ELEV. LOBBY FREIGHT			1	002	BLK	3.0
	ELEV. LOBBY PASS (4/3/4/21)				002	BLK	3.2
	ELEV. HI RISE 22/28			1	166	BLK	3.0
	ELEV. HI RISE (36-45)			1	166	BLK	3.0
	ELEV. HI RISE (22-28)			1	002	BLK.	3.2
3	SPI - SECURITY		FSD	1	109	Apollo	3.0
FLOOR	TEST	LIVE		FLOOR			
44	P.A. SPK	TONES		29		P.A. SPK	TONES
43	"	"	OK	28		"	OK
42	"	"	OK	27		"	OK
41	"	"	OK	26		"	OK
40	"	"	OK	25		"	OK
39	"	"	OK				
38	"	"	OK				
37	"	"	OK				
36	"	"	OK				
35	"	"	OK				
34	"	"	OK				
33	"	"	OK				
32	"	"	OK				
31	"	"	OK				
30			OK				

SERVICEMAN ASSIGNED: J. Torres / F. Zosiris
SEE AT JOB SITE: F.S.D 10-24-00
DATE SCHEDULED: 10-24-00
CONTRACT #: S/C 00 818
TYPE OF SYSTEM: K-W 8500 / 2000
FEE SERVICE #:
PO #:
CALL AUTHORIZED BY | PHONE | EXT

☒ MAINTENANCE ☒ TEST
☐ JOB COMPLETE ☐ JOB INCOMPLETE
☐ SYSTEM ON LINE ☐ SYSTEM OFF LINE

DEPARTED SHOP	TIME IN	TIME OUT	RETURNED SHOP	TOTAL HOURS
AM PM	800 AM PM	430 AM PM	AM PM	

MATERIAL RECORD

QUANTITY	DESCRIPTION	COST
	PREVENTIVE MAINTENANCE CONTRACT	

CUSTOMER NAME (PRINT): Sean O'Keeffe
CUSTOMER SIGNATURE:
SERVICEMAN SIGNATURE: J. Torres / F. Zosiris

AUTHORIZATION FOR FIRE ALARM INTERRUPTION
The undersigned has been advised by Fire Service Inc. representative that it may be necessary to interrupt the fire protection service by disconnecting the system and/or a component in the performance of their assigned work.
The undersigned hereby assumes the responsibility for the notification of the authorities at the time the interruption is initiated and will take all of the precautions deemed necessary during the period of interruption and hold harmless Fire Service Inc. and its employees regarding interruption of fire protection service during their service of the equipment.

NAME DATE TIME

SERVICE PERFORMED & REMAINING: Service Contract

Preventive Maintenance Smoke Sensitivity Test on Silent Spaces (as listed) above. - System Back / Reset - Output Functions O.K. - NOTE: Also Tested Alarm Tones / Audio Manual Evacuation on Floor 25 Found as listed. (Defective No Tones on These Floors) Power Pack Audio. - Levels Adj. Tested

(A) INACCESSIBLE (B) MISSING (C) DEFECTIVE (D) OTHER O.K.

FIRE SERVICE INCORPORATED

22362

Subsidiary of Firecom, Inc.
39-27 Fifty Ninth Street
Woodside, New York 11377
(718) 899-2311

REPORT OF FIELD SERVICE

LOCATIONS	DEVICES					
FLOOR						
7	AREA	S/D / PHOTO / HEAT	1-046	OPEN -		
	ANEX	DEVICE WIRING TO BE LOCATED				
7	DUCT	S/D ANEX	1-047	OPEN -		
		DEVICE WIRING TO BE LOCATED -				
7	FAN	SHUTDOWN ANEX	1-050	OPEN		
		WIRING / RELAY TO BE LOCATED -				
7	DAMPER	CONTROL / ANEX	TO LOCATED -			
		WIRING / RELAY - 1-055 OPEN EXT -				

PREVENTIVE MAINTENANCE CONTRACT

INVOICE TO:
7 W.T.C.
N-Y-C (SILVERSTEIN)

SERVICEMAN ASSIGNED: J. TORRES / F. ROSARIO	SEE AT JOB SITE: F.S.I.
	DATE SCHEDULED: 10-23-00
CONTRACT #: S/C 00 818	TYPE OF SYSTEM: LSN 2000
FEE SERVICE #	P.O. #
CALL AUHTORIZED BY	PHONE / EXT

☑ MAINTENANCE ☐ TEST
☐ JOB COMPLETE ☐ JOB INCOMPLETE
☐ SYSTEM ON LINE ☐ SYSTEM OFF LINE

DEPARTED SHOP	TIME IN	TIME OUT	RETURNED SHOP	TOTAL HOURS
800 AM/PM	900 AM/PM	7:30 AM/PM	AM/PM	

AUTHORIZATION FOR FIRE ALARM INTERRUPTION
The undersigned has been advised by Fire Service Inc. representative that it may be necessary to interrupt the fire protection service by disconnecting the system and/or a component in the performance of their assigned work.
The undersigned hereby assumes the responsibility for the notification at the time the interruption is initiated and will take all of the precautions deemed necessary during this period of interruption and hold harmless Fire Service Inc. and its employees regarding interruption of fire protection service during their service of the equipment.

NAME / DATE / TIME

MATERIAL RECORD

QUANTITY	DESCRIPTION	COST

CUSTOMER NAME (PRINT): Sean O'Keeffe
CUSTOMER SIGNATURE:
SERVICEMAN SIGNATURE: J. Torres - Frank Rosario

SERVICE PERFORMED & REMAINING: CHECK / All per Contract. Repairs per STATUS REPORT On 7th Fl. (COKE MEN) Area S/D (2) Units Located INSIDE CLOSET'S - Units Disabled NO POWER WIRING OPEN LOOP (FROM PREVIOUS). - WIRING NEED TRACING UP CEILING - NEED TO LOCATED PHOTO HEAT DET/ANEX CABLE L - ANEX 046 TROUBLE & DIDET. ANEX 046 ; JOB APPEARS TO BE INCOMPLETED. FAN SHUTDOWN ANEX (1-050) AIR DAMPER CONTROL ANEX (1-055) 7th FLOOR - ALSO STARTED TO TRACE AUDIO TONES MISSING ON FLOORS 35 UP to ROOF / RISER/PAGE O.K.

(A) INACCESSIBLE (B) MISSING (C) DEFECTIVE (D) OTHER
MICROPHONE - PAGE O.K. - INSIDE BIU. - TONES MANUAL EVAC. - DEFECT/MISSING DISET. - 1

FIRE SERVICE INCORPORATED

22386

Subsidiary of Firecom, Inc.
39-27 Fifty Ninth Street
Woodside, New York 11377
(718) 899-2311

REPORT OF FIELD SERVICE

LOCATIONS			DEVICES			
FLOOR	ADDRESS		S/D	CABLE	ZONE	SENS
6	SWITCHGEAR		BRK	1	171	3.0
	"		BRK	1	171	3.0
	"		BRK	1	171	3.2
	"		BRK	1	171	3.2
	"		BRK	1	171	3.0
6	H.V. VAULT	(4)	BRK	1	171	3.0
	H.V. VAULT	(4)	BRK	1	171	3.0
	H.V. VAULT	(4)	BRK	1	171	3.0
	H.V. VAULT	(1)	BRK	1	171	3.2
5	STEAM RM	FAN 1	HOLTZ	1	223	3.4
	"	"	HOLTZ	1	224	3.2
	"	"	HOLTZ	1	228	3.4
	"	"	HOLTZ	1	011	3.4
5	SWITCHGEAR	NORTH	BRK	1	170	3.0
	SWITCHGEAR	NORTH	BRK	1	170	3.0
	SWITCHGEAR	NORTH	BRK	1	170	3.2
	"	NORTH	BRK	1	170	3.2
	"	SOUTH	BRK	1	170	3.2
	"	SOUTH	BRK	1	170	3.0
	"	SOUTH	BRK	1	170	3.2
	"	SOUTH	BRK	1	170	3.0
	H.V. VAULTS	(6)	BRK	1	170	3.0 BZ
	H.V. VAULTS	(6)	BRK	1	170	3.0 BZ

PREVENTIVE MAINTENANCE CONTRACT

INVOICE TO: T.W.T.C. / SILVERSTEIN PROP. / N.Y.C.

SERVICEMAN ASSIGNED: J. TOWLES / F. ROSARIO	SEE AT JOB SITE: F.S.D
	DATE SCHEDULED: 10-16-00
CONTRACT #: S/C 00818	TYPE OF SYSTEM: LX N2000
FEE SERVICE #	P.O. #
CALL AUHTORIZED BY	PHONE / EXT

☐ MAINTENANCE ☐ TEST
☐ JOB COMPLETE ☐ JOB INCOMPLETE
☐ SYSTEM ON LINE ☐ SYSTEM OFF LINE

DEPARTED SHOP	TIME IN	TIME OUT	RETURNED SHOP	TOTAL HOURS
AM PM	800 AM PM	330 AM PM	420 AM PM	

MATERIAL RECORD

QUANTITY	DESCRIPTION	COST

CUSTOMER NAME (PRINT): Sean O'Keeffe
CUSTOMER SIGNATURE:
SERVICEMAN SIGNATURE: Frank Rosario

AUTHORIZATION FOR FIRE ALARM INTERRUPTION
The undersigned has been advised by Fire Service Inc. representative that it may be necessary to interrupt the fire protection service by disconnecting the system and/or a component in the performance of their assigned work.
The undersigned hereby assumes the responsibility for the notification of the authorities at the time the interruption is initiated and will take all of the precautions deemed necessary during the period of interruption and hold harmless Fire Service Inc. and its employees regarding interruption of fire protection service during their service of the equipment.

TIME _____ DATE _____ NAME _____

SERVICE PERFORMED & REMAINING: CONTINUE S/ CONTRACT BIENNIAL TEST SENSITIVITY AS LISTED ABOVE FLOOR'S 6TH - 5TH FLOORS - H. VOLTAGE VOLTAGE VAULT & SWITCHGEAR AREA'S. SYSTEM RESET AS OUTPUT FUNCTIONS O.K.

(A) INACCESSIBLE (B) MISSING (C) DEFECTIVE (D) OTHER

FIRE SERVICE INCORPORATED

22385

Subsidiary of Firecom, Inc.
39-27 Fifty Ninth Street
Woodside, New York 11377
(718) 899-2311

REPORT OF FIELD SERVICE

LOCATIONS | **DEVICES**

FLOOR	AREAS			CABLE	XMDR	S/D	SENS
9	ELEC	A		1	179	BRK	3.2
	COMM	A		1	179	BRK	3.0
	ELEC	A		1	179	BRK	3.0
	COMM	B		1	179	BRK	3.2
	ELEC	B		1	179	BRK	3.0
	TELEPH	B		1	179	BRK	3.2
	PASS	ELEV		1	008	BRK	3.0
	ELEC	C		1	178	BRK	3.2
	COMM	C		1	178	BRK	3.2
	TELEPH	C		1	178	BRK	3.0
	FREIGHT	ELEV		1	008	BRK	3.2
	RETURN	D/D	NORTH	1	238	HOCHKI	3.4
	RETURN	D/D	EAST	1	238	HOCHKI	3.2
	RET.	D/D	SOUTH	1	238	HOCHKI	3.4
	—						
9	ELEC	D		1	178	BRK	3.0
	COMM	D		1	178	BRK	3.2
	TELEPH	D		1	178	BRK	3.0
	CORE	MER	D/D	1	239	HOCHKI	3.2
	CORE	MER	D/D	1	239	HOCHKI	3.2
2	TAMPER	S/W		1	123	RESET	ALM
	(SPINDLE NOT SITTING PROPERLY)						—
37	TAMPER	S/W	(CLOSE VALVE / RESTRICTOR)				
20	TAMPER			1	146	ALM	
	DUE TO WEEP GROOVE CUT ON SHAFT						
	NEED ADJUSTMENT						

INVOICE TO: W.T.C
N.Y.C.

SERVICEMAN ASSIGNED	SEE AT JOB SITE
J. Tokley / F. Rosario	F.S.I.
	DATE SCHEDULED: 10-11-00
CONTRACT #: S/C00818	TYPE OF SYSTEM: LXN 2000
FEE SERVICE #	P.O. #
CALL AUHTORIZED BY	PHONE / EXT

☒ MAINTENANCE ☐ TEST
☐ JOB COMPLETE ☐ JOB INCOMPLETE
☐ SYSTEM ON LINE ☐ SYSTEM OFF LINE

DEPARTED SHOP	TIME IN	TIME OUT	RETURNED SHOP	TOTAL HOURS
800 AM/PM	800 AM/PM	430 AM/PM	AM/PM	

MATERIAL RECORD

QUANTITY	DESCRIPTION	COST
	PREVENTIVE MAINTENANCE CONTRACT	

CUSTOMER NAME (PRINT): Sean O'Keefe
CUSTOMER SIGNATURE:
SERVICEMAN SIGNATURE:

AUTHORIZATION FOR FIRE ALARM INTERRUPTION
The undersigned has been advised by Fire Service Inc. representatives that it may be necessary to interrupt the fire protection service by disconnecting the system and/or a components in the performance of their assigned work.
The undersigned hereby assumes the responsibility for the notification of the authorities at the time the interruption is initiated and will take all of the precautions deemed necessary during the period of interruption and hold harmless Fire Service Inc. and its employees regarding interruption of fire protection service during their service of the equipment.

NAME DATE TIME

SERVICE PERFORMED & REMAINING: Courtesy S/Contract — Repairs
Prev. Maintenance Per Contract Check Test Security on
Devices Open Circuits 9th. - Also Check / Repair on
Tamper S/W Floors 2nd / 20th - 37th as Required. —

(A) INACCESSIBLE (B) MISSING (C) DEFECTIVE (D) OTHER

FIRE SERVICE INCORPORATED

22359

Subsidiary of Firecom, Inc.
39-27 Fifty Ninth Street
Woodside, New York 11377
(718) 899-2311

REPORT OF FIELD SERVICE

LOCATIONS | **DEVICES**

FLOOR	AREA'S			CABLE	XMTR	S/D	SENS. TEST
8	COMM	A		1	177	BRK	3.2
	ELEC	A		1	177	BRK	3.0
	TELEPH	A		1	177	BRK	3.0
	ELEC	B		1	177	BRK	3.2
	COMM	B		1	177	BRK	3.0
	TELEPH	B		1	177	BRK	3.2
	COMM	C		1	180	BRK	3.2
	ELEC	C		1	180	BRK	3.0
	TELEPH	C		1	180	BRK	3.2
	TELEPH	D		1	180	BRK	3.0
	ELEC	D		1	180	BRK	3.0
	COMM	D		1	180	BRK	3.0
	PASS	ELEV.		1	007	BRK	3.2
	FREIGHT	ELEV		1	007	BRK	3.2
	CORE	MER	D/D	1	237	Hochiki	3.4
	CORE	MER	D/D	1	237	Hochiki	3.4
	RETURN	D/D	NORTH	1	236	Hochiki	3.2
	RETURN	D/D	EAST	1	236	Hochiki	3.4
*	RETURN	D/D	SOUTH	NO ACCESS - Fire			—
12	STORE PNL - TROUBLE / REPORTING (Loss of Telephone P.C.)						
Lobby	F.C. STATION CRT 2000 CHECK. CP40 UNIT						

PREVENTIVE MAINTENANCE CONTRACT

INVOICE TO: T.W.T.C. N.Y.C

SERVICEMAN ASSIGNED: J. Torres / F. Rosario	SEE AT JOB SITE: F.S.D
	DATE SCHEDULED: 10.4-00
CONTRACT #: S/C00918	TYPE OF SYSTEM: 8500
FEE SERVICE #	P.O #
CALL AUHTORIZED BY	PHONE / EXT

☑ MAINTENANCE ☐ TEST
☑ JOB COMPLETE ☐ JOB INCOMPLETE
☐ SYSTEM ON LINE ☐ SYSTEM OFF LINE

DEPARTED SHOP	TIME IN	TIME OUT	RETURNED SHOP	TOTAL HOURS
AM / PM	8:30 AM / PM	4:30 AM / PM	AM / PM	

MATERIAL RECORD

QUANTITY	DESCRIPTION	COST

CUSTOMER NAME (PRINT): Sean O'Keeffe
CUSTOMER SIGNATURE
SERVICEMAN SIGNATURE: J. Torres / F. Rosario

AUTHORIZATION FOR FIRE ALARM INTERRUPTION
The undersigned has been advised by Fire Service Inc. representative that it may be necessary to interrupt the fire protection service by disconnecting the system and/or a component in the performance of their assigned work.
The undersigned hereby assumes the responsibility for the notification of the authorities at the time the interruption is initiated and will take all of the precautions deemed necessary during this period of interruption and hold harmless Fire Service Inc. and its employees regarding interruption of the protection service during their service of the equipment.

NAME _____ DATE _____ TIME _____

SERVICE PERFORMED & REMAINING

As per Customer Check Tested Smoke Detectors on 8th. Floor Area Listed. - Also Checked on 12th. Floor Store P.N.L.s and Check's Acceptable. Also on F.C. Sta. / CP40 Unit - Found System Reset Back to Operation / OK.

(A) INACCESSIBLE (B) MISSING (C) DEFECTIVE (D) OTHER

FIRE SERVICE INCORPORATED

SUBSIDIARY OF FIRE[illegible]OM INC.

39-27 FIFTY NINTH STREET
WOODSIDE, NEW YORK 11377
(718)899-2311

52145

REPORT OF FIELD SERVICE

INVOICE TO

SERVICED
TWTC.
NEW YORK NY

CALL AUTHORIZED BY	CONTRACT #	FEE SERVICE #	FJ #	P O #	SEE AT JOB SITE
SHOP	U.P.S 318				T.S.D
PHONE / **EXT**	**DATE SCHEDULED**	**TIME SCHEDULED**			**SERVICEMAN ASSIGNED**
	9/26/2000	AM			C. FORERO & C TABARE

MATERIAL RECORD

QUANTITY ISSUED	QUANTITY B/O	F C I NO	DESCRIPTION	UNIT PRICE	PER	TOTAL AMOUNT
			PREVENTIVE MAINTENANCE CONTRACT			

CHECK APPROPRIATE BOX

- ☐ Q C
- ☐ I & T
- ☐ FEE CALL
- ☐ DELIVERY
- ☐ DEMO
- ☐ EMERGENCY CALL
- ☒ CONTRACT CALL
- ☐ PICK UP
- ☐ DEMO OWNER
- ☐ SURVEY

DEPARTED SHOP	TIME IN	TIME OUT	RETURNED SHOP	TOTAL HOURS	START MILEAGE	END MILEAGE	MISC EXPENSE	CAR FARE
8o	9.15							
AM	AM							

- ☐ MAT REQD
- ☐ PARTIAL
- ☐ OTHER
- ☐ LABOR REQD

I & T COMPLETE ☐ CALL COMPLETE ☐

SERVICE DATE 9/26/2000

WILL RETURN ON

CUSTOMER SIGNATURE

SERVICEMAN SIGNATURE C. FORERO AND C TABARE

AUTHORIZATION FOR FIRE ALARM INTERRUPTION

The undersigned has been advised by Fire Service Inc. representative that it may be necessary to interrupt the fire protection service by disconnecting the system and/or a component in the performance of their assigned work.

The undersigned hereby assumes the responsibility for the notification of the authorities at the time the interruption is initiated and will take all of the precautions deemed necessary during this period of interruption and hold harmless Fire Service Inc. and its employees regarding interruption of the protection service during their service of the equipment.

Date

X

Name

PROBLEM—AS DESCRIBED U.P.S MAINTENANCE / SERVICE CONTRACT (8o BATTERIES)

SERVICE PERFORMED TOOK Reading, Checked FANS, FILTERS AND CLEANED CABINET. EACH ALL BATTERIES Test (O.K) U.P.S it's OPERATIONAL (OK)
TOTAL AMPS = .3
TOTAL BATTERY VOLTAGE 146.9 DC
FREQUENCY = (60) 62.5 HZ
LOAD 1 = 11.7
LOAD 2 11.5
INPUT 1/AC 208/AC
OUTPUT 245

PREVENTIVE MAINTENANCE CONTRACT

WORK REMAINING

FCI 155

FIRE SERVICE INCORPORATED

76793

SUBSIDIARY OF FIRE COM INC.

39-27 FIFTY NINTH STREET
WOODSIDE, NEW YORK 11377
(718) 899-2311

REPORT OF FIELD SERVICE

INVOICE TO

SERVICED
T.W.T.C.
N.Y.C

CALL AUTHORIZED BY	CONTRACT #	FEE SERVICE #	FJ #	P.O. #	SEE AT JOB SITE
K.W	5C00818				F.S.J.

PHONE	EXT	DATE SCHEDULED	TIME SCHEDULED	SERVICEMAN ASSIGNED
		9-27-00	A.M.	J. Tolles F. Rosario

MATERIAL RECORD

QUANTITY ISSUED	QUANTITY B/O	FCI NO	DESCRIPTION	UNIT PRICE	PER	TOTAL AMOUNT
			PREVENTIVE MAINTENANCE CONTRACT			

CHECK APPROPRIATE BOX

- ☐ O.C
- ☐ I&T
- ☐ FEE CALL
- ☐ DELIVERY
- ☐ DEMO
- ☐ EMERGENCY CALL
- ☑ CONTRACT CALL
- ☐ PICK UP
- ☐ DEMO OWNER
- ☐ SURVEY

DEPARTED SHOP	TIME IN	TIME OUT	RETURNED SHOP	TOTAL HOURS	START MILEAGE	END MILEAGE	MISC EXPENSE	CAR FARE
	8:00	5:30						
	6:00	7:00						

- ☐ MAT REQD ☐ PARTIAL
- ☐ OTHER ☐ LABOR REQD

I&T COMPLETE ☐ CALL COMPLETE ☐

SERVICE DATE: 9-27-00

WILL RETURN ON:

CUSTOMER SIGNATURE:

SERVICEMAN SIGNATURE:

AUTHORIZATION FOR FIRE ALARM INTERRUPTION

The undersigned has been advised by Fire Service Inc representative that it may be necessary to interrupt the fire protection service by disconnecting the system and/or a component in the performance of their assigned work.

The undersigned hereby assumes the responsibility for the notification of the authorities at the time the interruption is initiated and will take all of the precautions deemed necessary during the period of interruption and hold harmless Fire Service Inc. and its employees regarding interruption of fire protection service during their service of the equipment.

Name

Date

PROBLEM—AS DESCRIBED To perform 5 Contract - Test P. Authority - As Requested

SERVICE PERFORMED As F.S.J. Requested Testing G.C. = J.C. Mechan Electrical Contracting Salvatore Barbara from Port Auth. Fire Inspecting on floors (31-32 + 36. Also check ESTD strobe lights. - NOTE: Lapies Battery strobe light not operational. - Also as per Contract Service Trouble Shooting 35th Fl. Sub System strobe panel alarm. Wiring Termination Courtesy Back to Panel 2 Trouble STATES. due to Units Disabled / floors under Renovation. - Also performed 'DAY' TEST on Area 1/0. Core Hr Fan Room on 43 and Area closets 40 to 42nd Fl. - (See Print out) As Requested

WORK REMAINING

FCI 155
REV 6186

FIRE SERVICE INCORPORATED

22358

Subsidiary of Firecom, Inc.
39-27 Fifty Ninth Street
Woodside, New York 11377
(718) 899-2311

REPORT OF FIELD SERVICE

LOCATIONS | **DEVICES**

FLOOR	AREA	S		CHAN	XTNDR	S/D	SENS TEST GRAM
7TH	ELECT	A		1	175	BLK	3.0
	CONN	A		1	175	BLK	3.0
	TELEPH	A		1	175	BLK	3.2
	PASS	ELEV.		1	006	BLK	3.0
	FREIGHT	ELEV.		1	006	BLK.	3.2
	CONN	B		1	175	BLK	3.0
	ELECT	B		1	175	BLK	3.0
	TELEPH	B		1	175	BLK	3.2
	TELEPH	C		1	174	BLK	3.0
	ELECT	C		1	174	BLK	3.2
	CONN	C		1	174	BLK	3.2
	TELEPH	D		1	174	BLK	3.0
	ELECT	D		1	174	BLK	3.0
	CONN	D		1	174	BLK	3.0
7TH	CORR	ELEV	D/D	1	235	Hochki	3.4
	CORR	ELEV	D/D	1	235	Hochki	3.4
	RETURN	D/D	NORTH	1	234	Hochki	3.2
	RETURN	D/D	SOUTH	1	234	Hochki	3.4
3RD	AREA	S/D	(2)	1	166	BLK	
	UNITS CHECK / SENSITIVITY AS REQUIRED.						
	3.2 RANGE NORMAL						

PREVENTIVE MAINTENANCE CONTRACT

INVOICE TO: W.T.C. SILVERSTEIN PROP. N.Y.C.

SERVICEMAN ASSIGNED: J. TORRES / F. ROSARIO	SEE AT JOB SITE: F.S.D.
	DATE SCHEDULED: 9-26-00
CONTRACT #: S/C 00 818	TYPE OF SYSTEM: 8500
FEE SERVICE #: -	P.O. #
CALL AUHTORIZED BY	PHONE / EXT

☒ MAINTENANCE ☐ TEST

☐ JOB COMPLETE ☐ JOB INCOMPLETE

☐ SYSTEM ON LINE ☐ SYSTEM OFF LINE

DEPARTED SHOP	TIME IN	TIME OUT	RETURNED SHOP	TOTAL HOURS
AM / PM	800 AM / PM	4:30 AM / PM	AM / PM	

MATERIAL RECORD

QUANTITY	DESCRIPTION	COST

CUSTOMER NAME (PRINT): SILVERSTEIN

CUSTOMER SIGNATURE

SERVICEMAN SIGNATURE

AUTHORIZATION FOR FIRE ALARM INTERRUPTION
The undersigned has been advised by Fire Service Inc. representative that it may be necessary to interrupt the fire protection service by disconnecting the system and/or a component in the performance of their assigned work.
The undersigned hereby assumes the responsibility for the notification of the authorities at the time the interruption is initiated and will take all of the precautions deemed necessary during the period of interruption and hold harmless Fire Service Inc. and its employees regarding interruption of the protection service during their service of the equipment.

NAME DATE TIME

SERVICE PERFORMED & REMAINING: 4 SPEA CONTROL / SENSING SMOKE DETECTOR ON 7TH FLR AREAS AS LISTED ABOVE / SENSITIVITY CHECK O.K. - SEE READINGS

(A) INACCESSIBLE (B) MISSING (C) DEFECTIVE (D) OTHER

FIRE SERVICE INCORPORATED

: 22356

Subsidiary of Firecom, Inc.
39-27 Fifty Ninth Street
Woodside, New York 11377
(718) 899-2311

REPORT OF FIELD SERVICE

LOCATIONS			DEVICES				
FLOOR	AREA	LOCATION		CABLE	XMDR	S/D	SENS TEST
11	COMM	A-B	(2)	1	182	BRK	3.2/3.0
	ELECT	A-B	(2)	1	182	BRK	3.0/3.0
	TELEPH	A-B	(2)	1	182	BRK	3.2/3.0
	PASS	ELEV		1	010	BRK	3.0
	FREIGHT	ELEV		1	010	BRK	3.0
	COMM	C		1	183	BRK	3.0
	TELEPH	C		1	183	BRK	3.0
	ELECT	C		1	183	BRK	3.0
	TELEPH	D		1	183	BRK	3.0
	ELECT	D		1	183	BRK	3.2
	COMM	D		1	183	BRK	3.0
	CORE	HDR	D/D	1	243	Hochiki	3.4
LED ✱	CORE	HDR	D/D	1	243	Hochiki	3.2
	RETURN	D/D	NORTH	1	242	Hochiki	3.4
	RETURN	D/D	SOUTH	1	242	Hochiki	3.2

35 SUB SYSTEM OPERATION PNL ALARMED
ZONE - TTB TERMINAL CHECK
REPAIRS - O.K. - (4-163)
A/C for F.S.D. - (XMDR - -

PREVENTIVE MAINTENANCE CONTRACT

INVOICE TO: T.W.T.C.
N.Y.C.

SERVICEMAN ASSIGNED: J. TORRES / F. ROSARIO	SEE AT JOB SITE: F.S.D.
	DATE SCHEDULED: 9-20-00
CONTRACT #: S/C00 818	TYPE OF SYSTEM: 8500
FEE SERVICE #	P.O. #
CALL AUHTORIZED BY	PHONE / EXT

☑ MAINTENANCE ☑ TEST
☐ JOB COMPLETE ☐ JOB INCOMPLETE
☐ SYSTEM ON LINE ☐ SYSTEM OFF LINE

DEPARTED SHOP	TIME IN	TIME OUT	RETURNED SHOP	TOTAL HOURS
AM PM	800 AM PM	430 AM PM	AM PM	

AUTHORIZATION FOR FIRE ALARM INTERRUPTION
The undersigned has been advised by Fire Service Inc. representative that it may be necessary to interrupt the fire protection service by disconnecting the system and/or a component in the performance of their assigned work.
The undersigned hereby assumes the responsibility for the notification of the authorities at the time the interruption is initiated and will take all of the precautions deemed necessary during the period of interruption and hold harmless Fire Service Inc. and its employees regarding interruption of fire protection service during their service of the equipment.

NAME / DATE / TIME

MATERIAL RECORD

QUANTITY	DESCRIPTION	COST

CUSTOMER NAME (PRINT): Sean O'Keeffe
CUSTOMER SIGNATURE:
SERVICEMAN SIGNATURE: J. Torres / J. Rosario

SERVICE PERFORMED & REMAINING: S/CONTRACT - Courtesy S/C Perf. Maintenance On Smoke Detection Unit on Above Locations (Above Listed.) - Floors 11th & Repairs on 35th FF Sub System Alarm. - Back to Operation.

(A) INACCESSIBLE (B) MISSING (C) DEFECTIVE (D) OTHER

(D) Removed to 11th Floor - Replace -

FIRE SERVICE INCORPORATED

22357

Subsidiary of Firecom, Inc.
39-27 Fifty Ninth Street
Woodside, New York 11377
(718) 899-2311

REPORT OF FIELD SERVICE

LOCATIONS | **DEVICES**

FLOOR	AREAS/CLOSET			CABLE	XTN/R	S/D	SENS TEST
14	COMM.	A-B	(2)	1	188	BRK	3.0/3.2
	TELEPH	A-B	(2)	1	188	BRK	3.0/3.0
	ELECT	A-B	(2)	1	188	BRK	3.2/3.0
	PASS	ELEV.	(1)	1	013	BRK	3.0
	FREIGHT	ELEV	(1)	1	013	BRK	3.2
	ELECT	C-D	(2)	1	189	BRK	3.2/3.0
	COMM	C-D	(2)	1	189	BRK	3.0/3.0
	TELEPH	C-D	(2)	1	189	BRK	3.2/3.0
	CORE	HER	D/D	1	249	HOOKI	3.4
	CORE	HER	D/D	1	249	HOOKI	3.4
	PLENUM	RETURN	SOUTH	1	248	HOOKI	3.2
*	PLENUM	RETURN	NORTH	NO ACCESS - LOC. UNKNOWN			
12	ELECT	A-B	(2)	1	184	BRK	3.0/3.2
	COMM	A-B	(2)	1	184	BRK	3.2/3.0
	TELEPH	A-B	(2)	1	184	BRK	3.0/3.0
	PASS	ELEV	(1)	1	011	BRK	3.0
	FREIGHT	ELEV	(1)	1	011	BRK	3.2
	CORE	HER	D/D (2)	1	245	HOOKI	3.4/3.2
	RETURN	PLENUM	NORTH	1	244	HOOKI	3.2
	RETURN	PLENUM	SOUTH	1	244	HOOKI	3.2
	ELECT	C-D	(2)	1	185	BRK	3.2/3.0
	COMM	C-D	(2)	1	185	BRK	3.2/3.2
	TELEPH	C-D	(2)	1	185	BRK	3.2/3.2

PREVENTIVE MAINTENANCE CONTRACT

INVOICE TO: 7 W.T.C.
N.Y.C.

SERVICEMAN ASSIGNED: L. TORRES / F. ROSARIO
SEE AT JOB SITE: T.S.D
DATE SCHEDULED: 9-19-00
CONTRACT #: S/C 00818
TYPE OF SYSTEM: 8500
FEE SERVICE #:
P.O. #:
CALL AUHTORIZED BY:
PHONE:
EXT:

☒ MAINTENANCE ☒ TEST
☐ JOB COMPLETE ☐ JOB INCOMPLETE
☐ SYSTEM ON LINE ☐ SYSTEM OFF LINE

DEPARTED SHOP	TIME IN	TIME OUT	RETURNED SHOP	TOTAL HOURS
800 AM/PM	900 AM/PM	420 AM/PM	AM/PM	

MATERIAL RECORD

QUANTITY	DESCRIPTION	COST

CUSTOMER NAME (PRINT): Sean O'Keeffe
CUSTOMER SIGNATURE:
SERVICEMAN SIGNATURE: L. Torres / F. Rosario

AUTHORIZATION FOR FIRE ALARM INTERRUPTION
The undersigned has been advised by Fire Service Inc. representative that it may be necessary to interrupt the fire protection service by disconnecting the system and/or a component in the performance of their assigned work.
The undersigned hereby assumes the responsibility for the notification of the authorities at the time the interruption is initiated and will take all of the precautions deemed necessary during this period of interruption and hold harmless Fire Service Inc. and its employees regarding interruption of fire protection service during their service of the equipment.

TIME / DATE / NAME

SERVICE PERFORMED & REMAINING

S/CONTRACT PREV. MAINTENANCE SMOKE DETECTOR - SENSITIVITY TEST ON ALARM LOCATIONS (ABOVE LISTED) FLOOR'S 14 & 12 FLOORS. — SYSTEM OCC/RESET - OUTPUT O.K. — BACK TO OPERATION. —

(*) NOTE: 14TH PLENUM RETURN D/D NORTH (NO ACCESS/LOCAT. UNK AS PREVIOUS LISTED). —

(A) INACCESSIBLE (B) MISSING (C) DEFECTIVE (D) OTHER

FIRE SERVICE INCORPORATED

22355

Subsidiary of Firecom, Inc.
39-27 Fifty Ninth Street
Woodside, New York 11377
(718) 899-2311

REPORT OF FIELD SERVICE

LOCATIONS | **DEVICES**

INVOICE TO: T.W.T.C. Prof. Silverstein N.Y.C.

FLOOR				PANEL	ZONE/PT	TST/SENS	S/D
16	CORE	HER	(1)	1	253	3.2	HOUSTON
	CORE	HER	(1)	1	253	3.4	HOUSTON
	ELEC	A-B	(2)	1	193	3.0	BLK
	COMM	A-B	(2)	1	193	3.2	BLK
	TELEPH	A-B	(2)	1	193	3.0	BLK
	PASS	ELEV.	(1)	1	015	3.2	BLK
	FREIGHT	ELEV.	(1)	1	015	3.2	BLK
	ELEC	C-D	(2)	1	194	3.0	BLK
	COMM	C-D	(2)	1	194	3.0	BLK
	TELEPH	C-D	(2)	1	194	3.0	BLK
	PLENUM	RET.	D/D NOTA	1	252	3.4	HOUSTON
	4	RET-D/D SOUTH		NO ACCESS-U/L. -			
15	CORE	HER	D/D (1)	1	251	3.4	HOUSTON
*	CORE	HER	D/D (1)	1	251	3.2	HOUSTON
	COMM	A-B	(2)	1	190	3.0	BLK
	ELEC	A-B	(2)	1	190	3.2	BLK
	TELEPH	A-B	(2)	1	190	3.2	BLK.
	TELEPH	C-D	(2)	1	191	3.2	BLK
	ELEC	C-D	(2)	1	191	3.2	BLK
	COMM	C-D	(2)	1	191	3.2	BLK.
	PASS	ELEV.		1	014	3.0	BLK
	FREIGHT	ELEV		1	014	3.0	BLK.
	PLENUM	RET.	D/D	1	250	3.4	HOUSTON
⊕	9	RET. SOUTH	N/A	NO ACCESS -			

PREVENTIVE MAINTENANCE CONTRACT

SERVICEMAN ASSIGNED: J. JONES / J. ROSARIO

SEE AT JOB SITE: F.S.I.

DATE SCHEDULED: 8-30-00

CONTRACT #: S/C 00818

TYPE OF SYSTEM: 8500

FEE SERVICE #:

PO #:

CALL AUTHORIZED BY | PHONE | EXT

☒ MAINTENANCE ☒ TEST

☐ JOB COMPLETE ☐ JOB INCOMPLETE

☐ SYSTEM ON LINE ☐ SYSTEM OFF LINE

DEPARTED SHOP	TIME IN	TIME OUT	RETURNED SHOP	TOTAL HOURS
AM PM	8:00 AM PM	4:30 AM PM	AM PM	

MATERIAL RECORD

QUANTITY	DESCRIPTION	COST
(2)	I.C. Prin's - Bypass. -	

CUSTOMER NAME (PRINT): SILVERSTEIN

CUSTOMER SIGNATURE:

SERVICEMAN SIGNATURE:

AUTHORIZATION FOR FIRE ALARM INTERRUPTION
The undersigned has been advised by Fire Service Inc. representatives that it may be necessary to interrupt the fire protection service by disconnecting the system and/or a component in the performance of duty assigned work.
The undersigned hereby assumes the responsibility for the notification of the authorities at the time the interruption is initiated and will take all of the precautions deemed necessary during this period of interruption and hold harmless Fire Service Inc. and its employees regarding interruption of fire protection service during their service of the equipment.

NAME DATE TIME

SERVICE PERFORMED & REMAINING

S/C COVERAGE -
PREV. MAINTENANCE ON SMOKE DETECTION SYSTEM - FLOORS 16 & 15 AS LISTED
ABOVE - UNITS TESTED / SENSITIVITY / CLEANED - SYSTEM O.K. / LISTED
OUTPUTS FUNCTIONS / BATTERY CHARGE - O.K. -
NOTE: CORE HER D/D (2) (ELEV.) W/G TO REPAIR & BYPASS. (2) 15TH FL. -
RETURN SOUTH SIDE @ 16-15TH FL. NO ACCESS / AS PREVIOUS REPORTING. -

(A) INACCESSIBLE (B) MISSING (C) DEFECTIVE (D) OTHER

(2) I.C.'s Prin's replaced on BPZ / Floors 20/14th Bypass defective / Cleaned all. -

FIRE SERVICE INCORPORATED 76792

SUBSIDIARY OF FIRE ... M INC.

39-27 FIFTY NINTH STREET
WOODSIDE, NEW YORK 11377
(718) 899-2311

REPORT OF FIELD SERVICE

INVOICE TO

SERVICED

T.W.T.C.
Silverstein Prop.
N.Y.C.

M. Carrigan

CALL AUTHORIZED BY	CONTRACT #	FEE SERVICE #	FJ #	P.O. #	SEE AT JOB SITE
R.T.	SFC 00 818				FS-7
PHONE / **EXT**	**DATE SCHEDULED**	**TIME SCHEDULED**			**SERVICEMAN ASSIGNED**
	8-29-00	AM			J. Toles / F. Rogers

MATERIAL RECORD

QUANTITY ISSUED	QUANTITY B/O	F.C.I. NO.	DESCRIPTION	UNIT PRICE	PER	TOTAL AMOUNT
			PREVENTIVE MAINTENANCE CONTRACT			

CHECK APPROPRIATE BOX

- ☐ O.C
- ☐ I & T
- ☐ FEE CALL
- ☐ DELIVERY
- ☐ DEMO
- ☐ EMERGENCY CALL
- ☒ CONTRACT CALL
- ☐ PICK UP
- ☐ DEMO OWNER
- ☐ SURVEY

DEPARTED SHOP	TIME IN	TIME OUT	RETURNED SHOP	TOTAL HOURS	START MILEAGE	END MILEAGE	MISC EXPENSE	CAR FARE
	800	4:30						

- ☐ MAT REQD ☐ PARTIAL
- ☐ OTHER ☐ LABOR REQD

SERVICE DATE: 8-29-00

I & T COMPLETE ☐ CALL COMPLETE ☐

WILL RETURN ON

CUSTOMER SIGNATURE

SERVICEMAN SIGNATURE

AUTHORIZATION FOR FIRE ALARM INTERRUPTION

The undersigned has been advised by Fire Service, Inc. representative that it may be necessary to interrupt the fire protection service by disconnecting the system and/or a component in the performance of their assigned work.
The undersigned hereby assumes the responsibility for the notification of the authorities at the time the interruption is initiated and will take all of the precautions deemed necessary during the period of interruption and hold harmless Fire Service Inc. and its employees regarding interruption of the protection service during their service of the equipment

Date

Name

PROBLEM—AS DESCRIBED S/ CONTRACT - SEMIANNUAL - Repairs -

SERVICE PERFORMED Performed Repairs on 44" STROBE PANEL AFC100 - MAIN P.C. Board - UPDATE CHANGES - INTERMITTENT SIGNAL TROUBLE - Replaced Adjust / Installed - Also as per Contract Maintenance on 13 Fl. all areas tested. Smoke Detectors Sensitivity Test: as:

	Telephone Chief A-B	3.0 Sens	Test ✓	Xtnd 1-186	Blk
	Comm. " A-B	3.2 "	✓	1-186	Blk
13 Fl	Electric " A-B	3.0 "	✓	1-186	Blk
	Comm " C-D	3.2	✓	1-187	Blk
	Elect " C-D	3.0	✓	1-187	Blk
	Teleph " C-D	3.2	✓	1-187	Blk
	Pass-Elev.	3.0	✓	1-012	Blk
	Freight Elev	3.0	✓	1-012	Blk
	Core Hol (2) D/D	3.4	✓	1-247	Hochiki
	Plenum Return D/D North	3.4	✓	1-246	Hochiki
	Plenum Return D/D South	3.4	✓	1-246	Hochiki

WORK REMAINING

FCI 155
REV 6186

FIRE SERVICE INCORPORATED : 22354

Subsidiary of Firecom, Inc.
39-27 Fifty Ninth Street
Woodside, New York 11377
(718) 899-2311

REPORT OF FIELD SERVICE

LOCATIONS			DEVICES				
FLOOR	Area		S/D	CABLE	XTNDR	SENS/RET	
17	PASS ELEV.		BLK	1	016	3.2	
	FREIGHT ELEV		BLK	1	016	3.0	
	ELECT.	A	BLK	1	197	3.0	
	COMM	A	BLK	1	197	3.2	
	TELEPH	A	BLK	1	197	3.0	
	ELECT	B	BLK	1	197	3.0	
	COMM	B	BLK	1	197	3.2	
	TELEPH	B	BLK	1	197	3.2	
	COMM	C	BLK	1	196	3.0	
	ELECT	C	BLK	1	196	3.0	
	TELEPH	C	BLK	1	196	3.2	
	ELECT	D	BLK	1	196	3.0	
	COMM	D	BLK	1	196	3.0	
	TELEPH	D	BLK	1	196	3.2	
	CORE	MEN	HOWARD	1	256	3.4	
	CORE	WOM	HOWARD	1	256	3.4	
17	PLENUM RET. D/D - N/A - (42) - (PLASTER CEILING - SOLID) -						

INVOICE TO: W.T.C. P SILVERSTEIN REP. N.Y.C.

SERVICEMAN ASSIGNED: J. TORRES / F. ROSARIO	SEE AT JOB SITE: F.S.I
	DATE SCHEDULED: 8-23-00
CONTRACT #: S/C00 818	TYPE OF SYSTEM: 8500
FEE SERVICE #	P.O. #
CALL AUHTORIZED BY	PHONE / EXT
☑ MAINTENANCE ☐ TEST	
☐ JOB COMPLETE ☐ JOB INCOMPLETE	
☐ SYSTEM ON LINE ☐ SYSTEM OFF LINE	

DEPARTED SHOP	TIME IN	TIME OUT	RETURNED SHOP	TOTAL HOURS
AM PM	800 AM PM	430 AM PM	AM PM	

AUTHORIZATION FOR FIRE ALARM INTERRUPTION
The undersigned has been advised by Fire Service Inc. representative that it may be necessary to interrupt the fire protection service by disconnecting the system and/or a component in the performance of their assigned work.
The undersigned hereby assumes the responsibility for the notification of the authorities at the time the interruption is initiated and will take all of the precautions deemed necessary during the period of interruption and hold harmless Fire Service Inc. and its employees regarding interruption of the protection service during their service of the equipment.

NAME _____ DATE _____ TIME _____

PREVENTIVE MAINTENANCE CONTRACT

4th STROBE PNL: CHECK/REPLACED LOW BATTERIES OUTPUT - (2) DEAD WITH 12 VOLT - REPLACED O.K.

19th STROBE PNL: CHECK/TROUBLESHOOT (2) BATTERIES REPLACED LOW VOLTAGE OUTPUT (12 VOLT) O.K.

MATERIAL RECORD

QUANTITY	DESCRIPTION	COST
4	12 VOLT BATTERIES	69.95
—	(STROBES PNL'S) —	

CUSTOMER NAME (PRINT): SILVERSTEIN

CUSTOMER SIGNATURE: [signature]

SERVICEMAN SIGNATURE: [signature]

SERVICE PERFORMED & REMAINING: CERTIFY S/CONTRACT

PREVENTIVE MAINTENANCE SMOKE DETECTION UNITS ON 17TH FLR. AREAS (ABOVE LISTED) CLOSE FIRE ALARM SYSTEM. - UNITS OR WORKSTATIONS - PLENUM D/D N/A - CEILING PREVIOUSLY - SYSTEM CHECKED. ALSO REPAIRED/REPLACED BATTERIES FOR STROBES PNL'S

(A) INACCESSIBLE (B) MISSING (C) DEFECTIVE (D) OTHER

FIRE SERVICE INCORPORATED

22353

Subsidiary of Firecom, Inc.
39-27 Fifty Ninth Street
Woodside, New York 11377
(718) 899-2311

REPORT OF FIELD SERVICE

LOCATIONS | **DEVICES**

FLOOR	AREAS			S/D	CABLE	XTNSN	TST MEAN
19TH	ELEV	PASS		BRK	1	018	√3.2
	TELEPH	A-B	(2)	BRK	1	201	3.0
	COMM	A-B	(2)	BRK	1	201	3.0
	ELECT.	A-B	(2)	BRK	1	201	3.2
	CORE MER	D/D		HOWK	1	260	3.2
	CORE MER	D/D		HOWK	1	260	3.4
	ELEV.	FREIGHT		BRK	1	018	3.0
	PLENUM	RET. D/D	South	HOWK	1	259	3.4
	"	RET. D/D	North	HOWK	1	259	3.4
	ELECT	C-D	(2)	BRK	1	200	3.2
	COMM	C-D	(2)	BRK	1	200	3.0
19TH	TELEPH	C-D	(2)	BRK	1	200	3.0
18	ELECT	A-B	(2)	BRK	1	199	3.2
	COMM	A-B	(2)	BRK	1	199	3.0
	TELEPH	A-B	(2)	BRK	1	199	3.2
	PASS	ELEV.		BRK	1	017	3.0
	FREIGHT	ELEV		BRK	1	017	3.2
	CORE	MER	D/D	HOWK	1	258	3.4
	CORE	MER	D/D	HOWK	1	258	3.4
	TELEPH	C-D	(2)	BRK	1	198	3.2
	ELECT	C-D	(2)	BRK	1	198	3.0
	COMM	C-D	(2)	BRK	1	198	3.0
	PLENUM	RET	D/D N.	HOWK	1	257	3.4
18TH	PLENUM	RET	D/D South	HOWK	1	257	3.4

INVOICE TO:
7 W.T.C
Silverstein Properties
N.Y.C.

SERVICEMAN ASSIGNED	SEE AT JOB SITE
J. Torres / F. Rosario	F.S.D
CONTRACT #	TYPE OF SYSTEM
S/C00818	8J00
FEE SERVICE #	P.O. #
CALL AUHTORIZED BY	PHONE / EXT

☐ MAINTENANCE ☑ TEST
☐ JOB COMPLETE ☐ JOB INCOMPLETE
☐ SYSTEM ON LINE ☐ SYSTEM OFF LINE

DEPARTED SHOP	TIME IN	TIME OUT	RETURNED SHOP	TOTAL HOURS
AM PM	800 AM PM	430 AM PM	AM PM	

MATERIAL RECORD

QUANTITY	DESCRIPTION	COST
	PREVENTIVE MAINTENANCE CONTRACT	

CUSTOMER NAME (PRINT) SILVERSTEIN
CUSTOMER SIGNATURE
SERVICEMAN SIGNATURE

AUTHORIZATION FOR FIRE ALARM INTERRUPTION
The undersigned has been advised by Fire Service Inc. representative that it may be necessary to interrupt the fire protection service by disconnecting the system and/or a component in the performance of their assigned work.
The undersigned hereby assumes the responsibility for the notification of the authorities at the time the interruption is initiated and will take all of the precautions deemed necessary during the period of interruption and hold harmless Fire Service Inc. and its employees regarding interruption of the protection service during their service of the equipment.

NAME DATE TIME

SERVICE PERFORMED & REMAINING

Service Contract
Preventive Maintenance on Smoke Detection Units on Floors (As per List)
Class-E Fire Equipment System - Units in working order - System left in Normal
Back to Operation.
Job to be Continued Next Day.

(A) INACCESSIBLE (B) MISSING (C) DEFECTIVE (D) OTHER

FIRE SERVICE INCORPORATED

22352

Subsidiary of Firecom, Inc.
39-27 Fifty Ninth Street
Woodside, New York 11377
(718) 899-2311

REPORT OF FIELD SERVICE

LOCATIONS | **DEVICES**

FLOOR	AREAS			S/D	CABLE	ZONE/DR	TST/CLEAN
20	PASS	ELEV.		BLK	1	019	3.0
	FREIGHT	ELEV.		BLK	1	019	3.0
	COMM	A			1	203	3.2
	ELECT	A			1	203	3.0
	TELEPH	A			1	203	3.2
	COMM	B			1	203	3.0
	ELECT	B			1	203	3.2
	TELEPH	B			1	203	3.0
	TELEPH	C			1	202	3.0
	ELECT	C			1	202	3.2
	COMM	C			1	202	3.0
	ELECT	D			1	202	3.0
	TELEPH	D			1	202	3.2
	COMM	D			1	202	3.0
	CORE AREA	D/D		HONEYWELL	1	262	3.4
	CORE AREA	D/D		HONEYWELL	1	262	3.2
	RETURN	D/D	NORTH	HONEYWELL	1	261	3.2
	RETURN	D/D	SOUTH	HONEYWELL	1	261	3.4
20	RETURN	D/D	EAST	HONEYWELL	3	045	
13	STROBE PWR	AFC100	Replaced (2) Batteries				
	12 VOLTS - BACK UP POWER - O.K. -						
44	STROBE PWR	AFC100	TRouble STATUS (4-370)				
	NEEDED (2) BATTERIES	12 VOLT UNITS					
	TO BE REPLACED	-					

INVOICE TO: J.W.T.C.
N.Y.C.

SERVICEMAN ASSIGNED: J. TORRES / F. ROSARIO	SEE AT JOB SITE: F.S.I.
	DATE SCHEDULED: 8-16-00
CONTRACT #: S/C 818	TYPE OF SYSTEM: 8500
FEE SERVICE #	P.O. #
CALL AUHTORIZED BY	PHONE / EXT
☒ MAINTENANCE	☐ TEST
☐ JOB COMPLETE	☐ JOB INCOMPLETE
☐ SYSTEM ON LINE	☐ SYSTEM OFF LINE

DEPARTED SHOP	TIME IN	TIME OUT	RETURNED SHOP	TOTAL HOURS
AM PM	800 AM PM	430 AM PM	AM PM	

MATERIAL RECORD

QUANTITY	DESCRIPTION	COST
2	12 VOLTS BATTERIES	69.95

PREVENTIVE MAINTENANCE CONTRACT

CUSTOMER NAME (PRINT): Sean O'Keeffe.
CUSTOMER SIGNATURE:
SERVICEMAN SIGNATURE: J. Torres - Jack Torres

SERVICE PERFORMED & REMAINING: Routine Steadyset - Preventive Maintenance on Strobe Detection Units & Equipment on 20th (as listed). - Also Repairs on 13th Floor / 44th Pending - (2) BATTERIES Back up Units Needed - 12 VOLTS. -

AUTHORIZATION FOR FIRE ALARM INTERRUPTION
The undersigned has been advised by Fire Service Inc. representative that it may be necessary to interrupt the fire protection service by disconnecting the system and/or a component in the performance of their assigned work.
The undersigned hereby assumes the responsibility for the notification of the authorities at the time the interruption is initiated and will take all of the precautions deemed necessary during the period of interruption and hold harmless Fire Service Inc. and its employees regarding interruption of the protection service during their service of the equipment.

NAME DATE TIME

(A) INACCESSIBLE (B) MISSING (C) DEFECTIVE (D) OTHER

FIRE SERVICE INCORPORATED

22351

Subsidiary of Firecom, Inc.
39-27 Fifty Ninth Street
Woodside, New York 11377
(718) 899-2311

REPORT OF FIELD SERVICE

LOCATIONS | **DEVICES**

INVOICE TO: 7W.T.C.
N.Y.C.
FSI: J. Corrigan

FLOOR				S/D	CODE	XMTR	TST SENS.
22	FREIGHT ELEV.			BRK	1	021	3.0
	PASS ELEV.		21-3	BRK	1	021	3.0
	COMM	'A'		BRK	1	207	3.0
	ELECT	'A'		BRK	1	207	3.2
	TELEPH	'A'		BRK	1	207	3.2
	COMM	'B'		BRK	1	207	3.0
	ELECT	'B'		BRK	1	207	3.2
	TELEPH	'B'		BRK	1	207	3.0
	ELECT	'C'		BRK	1	206	3.0
	TELEPH	'C'		BRK	1	206	3.0
	COMM	'C'		BRK	1	206	3.2
	TELEPH	'D'		BRK	1	206	3.2
	ELECT	'D'		BRK	1	206	3.0
	COMM	D		BRK	1	206	3.0
	CODE HER D/D			HORNS	1	266	4.0
	CODE HER D/D			HORNS	1	266	3.8
(+)	RETURN SOUTH	(LED)		HORNS	1	265	3.8
	RET. NORTH			HORNS	1	265	3.8
21	ELECT.	A-B	(2)	BRK	1	204	3.0/3.0
	TELEPH	A-B	(2)	BRK	1	204	3.2/3.0
	COMM	A-B	(2)	BRK	1	204	3.0/3.0
	ELECT	C-D	(2)	BRK	1	205	3.0/3.2
	COMM	C-D	(2)	BRK	1	205	3.0/3.0
	TELEPH	C-D	(2)	BRK	1	205	3.2/3.0
	CODE HER D/D			HORNS	1	264	3.4
	CODE HER D/D			HORNS	1	264	3.4
(+)	RETURN D/D	NORTH LED		HORNS	1	263	3.4
	RETURN D/D	SOUTH		HORNS	1	263	3.4
	PASS ELEV.			BRK.	1	020	3.2
	FREIGHT ELEV.			BRK	1	020	3.0

PREVENTIVE MAINTENANCE CONTRACT

SERVICEMAN ASSIGNED: J. TORRES / F ROSARIO
SEE AT JOB SITE: F.S.D.
DATE SCHEDULED: 8-15-00
CONTRACT #: S/C00818
TYPE OF SYSTEM: 8500
FEE SERVICE #:
P.O. #:
CALL AUHTORIZED BY | PHONE | EXT

☒ MAINTENANCE ☒ TEST
☐ JOB COMPLETE ☐ JOB INCOMPLETE
☐ SYSTEM ON LINE ☐ SYSTEM OFF LINE

DEPARTED SHOP	TIME IN	TIME OUT	RETURNED SHOP	TOTAL HOURS
AM PM	800 AM PM	430 AM PM	AM PM	

MATERIAL RECORD

QUANTITY	DESCRIPTION	COST

CUSTOMER NAME (PRINT): Sean O'Keeffe
CUSTOMER SIGNATURE:
SERVICEMAN SIGNATURE:

AUTHORIZATION FOR FIRE ALARM INTERRUPTION
The undersigned has been advised by Fire Service Inc. representative that it may be necessary to interrupt the fire protection service by disconnecting the system and/or a component as the performance of their assigned work.
The undersigned hereby assumes the responsibility for the notification of the authorities at the time the interruption is initiated and will take all of the precautions deemed necessary during the period of interruption and hold harmless Fire Service Inc. and its employees regarding interruption of the protection service during their service of the equipment.

NAME | DATE | TIME

SERVICE PERFORMED & REMAINING: Courtesy S/Contract - Preventive Maintenance on Smoke Detectors all Brk Floors 22/21st Fl. - (+) = 22nd + 21st Fl. LED's to Replace (Light Injectors N/G). - to Continue. -

(A) INACCESSIBLE (B) MISSING (C) DEFECTIVE (D) OTHER

FIRE SERVICE INCORPORATED

22350

Subsidiary of Firecom, Inc.
39-27 Fifty Ninth Street
Woodside, New York 11377
(718) 899-2311

REPORT OF FIELD SERVICE

LOCATIONS			DEVICES			
FLOOR	AREA		S/D	CABLE	XINDR	TEST SENS
24	ELEV. Abby Pass		BRK	2	001	3.0
	COMM	A	BLK	2	172	3.0
	ELECT	A	BLK	2	172	3.2
	TELEPH	A	BLK	2	172	3.0
	COMM	B	BLK	2	172	3.2
	ELECT	B	BLK	2	172	3.0
	TELEPH	B	BLK	2	172	3.0
	RETURN D/D NORTH		HOCHIKI	2	230	3.4
	RETURN D/D SOUTH		HOCHIKI	2	230	3.2
(A)	FREIGHT ELEV.		BLK	2	001	4.0 (C)
	COMM	C	BLK	2	171	3.0
	ELECT	C	BLK	2	171	3.2
(A)	TELEPH	C	BLK	2	171	3.4 (C)
	TELEPH	D	BLK	2	171	3.0
	ELECT	D	BLK	2	171	3.2
	COMM	D	BLK	2	171	3.0
	CORE	MEN. D/D	HOCHIKI	2	231	3.2
	CORE	MEN D/D	HOCHIKI	2	231	3.4
47	E.M.R. AREA S/D (X2) UNIT RETESTED					
	DUE TO SMOKE CONDITION AS BLD MANAGE.					
	REQUEST. - SENSITIVITY CHECK / NORMAL LEVEL					
	(3.0 SENS. FINISH NOTE). - UNIT DIDN'T					
	ACTIVATED POSSIBLE DUE TO AIR FANS BLOW					
	ON FLOOR PUSHING AIR / SMOKE AWAY FROM UNIT.					
	SUGGESTED TO INSTALL ONE (1) EXTRA UNIT CENTER					
	OF ROOM - DUE TO SIZE OF ROOM. -					
15	STROBE PANEL (Replaced) INSTALLED (2)					
	NEW 12VOLTS BATTERIES. - PANEL RESET					
	BACK TO NORMAL. —					

INVOICE TO: T.W.T.C.
Silverstein Prop.
N.Y.C.
F.S.D.

SERVICEMAN ASSIGNED: J. Torres, Carlos Tabares	SEE AT JOB SITE: 8-9-00
	DATE SCHEDULED: 8-9-00
CONTRACT #: S/C 00 818	TYPE OF SYSTEM: 850
FEE SERVICE #	P.O. #
CALL AUHTORIZED BY	PHONE / EXT

☒ MAINTENANCE ☐ TEST
☐ JOB COMPLETE ☐ JOB INCOMPLETE
☐ SYSTEM ON LINE ☐ SYSTEM OFF LINE

DEPARTED SHOP	TIME IN	TIME OUT	RETURNED SHOP	TOTAL HOURS
AM PM	8:00 AM PM	4:30 AM PM	AM PM	

MATERIAL RECORD

QUANTITY	DESCRIPTION	COST
2	12VOLTS BATTERIES	
	PREVENTIVE MAINTENANCE CONTRACT	

CUSTOMER NAME (PRINT): Sean O'Keefe.
CUSTOMER SIGNATURE
SERVICEMAN SIGNATURE

AUTHORIZATION FOR FIRE ALARM INTERRUPTION
The undersigned has been advised by Fire Service Inc. representatives that it may be necessary to interrupt the fire protection service by disconnecting the system and/or a component in the performance of their assigned work.
The undersigned hereby assumes the responsibility for the notification of the authorities at the time the interruption is initiated and will take all of the precautions deemed necessary during the period of interruption and hold harmless Fire Service Inc. and its employees regarding interruption of fire protection service during their service of the equipment.

NAME DATE TIME

SERVICE PERFORMED & REMAINING: Courtesy Annual Maintenance 24 Hr. All Above S/D. As Listed Above. SENSITIVITY TEST / CHECK. NOTE: UNITS (A) TO BE RETESTED / SENS. TO BE TO HIGH As per Location. — Also Check's Done on 47 Fl as BLD Request - & Repairs on 15 Fl. AFC. STROBE PANEL'S Batteries Replaced due to Low Output Voltages. —

(A) INACCESSIBLE (B) MISSING (C) DEFECTIVE (D) OTHER

FIRE SERVICE INCORPORATED

22349

Subsidiary of Firecom, Inc.
39-27 Fifty Ninth Street
Woodside, New York 11377
(718) 899-2311

REPORT OF FIELD SERVICE

LOCATIONS | **DEVICES**

FLOOR				S/D	CABK	ANNUN	TST CLEAN
25	ELECT	B		BRK	2	174	3.2
	COMM	B		BRK	2	174	3.0
	TELEPH	B		BLK	2	174	3.0
	PASS ELEV.			BLK	2	002	3.2
	FREIGHT ELEV			EDWDS	2	002	3.0
	COMM	A		BLK	2	174	3.2
	ELECT	A		BLK	2	174	3.0
	TELEPH	A		BLK	2	174	3.0
	ELEC	C		BRK	2	173	3.2
	COMM	C		BRK	2	173	3.0
	TELEPH	C		BRK	2	173	3.0
	TELEPH	D		BLK	2	173	3.0
	ELECT	D		BRK	2	173	3.2
	COMM	D		BLK	2	173	3.0
	RETURN D/D	NORTH		Hatfiki	2	232	3.4
	RETURN D/D	SOUTH.		Hatfiki	2	232	3.4
25	CORE/HER	D/D		Hatfiki	2	233	3.4
	CORE/HER	D/D.		Hatfiki	2	233	3.2
16	STROBE PNL	Trouble / Alarm's Done					DC.
		Replaced / SIGNAL OUTPUT.					- OC.
15	STROBE PNL:	BATTERIES NEEDED (2) 12Ah					
		(BACK UP UNITS)					

INVOICE TO: T.W.T.C.
N.Y.C.

SERVICEMAN ASSIGNED: J. TOALES / C. TAMBRES	SEE AT JOB SITE: F.S.D
	DATE SCHEDULED: 8-8-00
CONTRACT #: S/C 008 18	TYPE OF SYSTEM: 8500
FEE SERVICE #	P.O #
CALL AUHTORIZED BY	PHONE / EXT

☒ MAINTENANCE ☐ TEST
☐ JOB COMPLETE ☐ JOB INCOMPLETE
☐ SYSTEM ON LINE ☐ SYSTEM OFF LINE

DEPARTED SHOP	TIME IN	TIME OUT	RETURNED SHOP	TOTAL HOURS
AM / PM	800 AM/PM	430 PM	AM / PM	

MATERIAL RECORD

QUANTITY	DESCRIPTION	COST
	PREVENTIVE MAINTENANCE CONTRACT	

CUSTOMER NAME (PRINT): Sean O'Keeffe
CUSTOMER SIGNATURE
SERVICEMAN SIGNATURE

AUTHORIZATION FOR FIRE ALARM INTERRUPTION
The undersigned has been advised by Fire Service Inc. representative that it may be necessary to interrupt the fire protection service by disconnecting the system and/or a component in the performance of their assigned work.
The undersigned hereby assumes the responsibility for the notification of the authorities at the time the interruption is initiated and will take all of the precautions deemed necessary during this period of interruption and hold harmless Fire Service Inc. and its employees regarding interruption of fire protection service during their service of the equipment.

NAME DATE TIME

SERVICE PERFORMED & REMAINING

Courtesy yearly (2) TEST Sensitivity Cleaning of smoke detectors units on 25th Fl. All found as listed. - Also replaced on 16th + 15th STROBES PNLS. - (2) BATTERIES to be replaced on 15th Fl. (STROBE PNL)

(A) INACCESSIBLE (B) MISSING (C) DEFECTIVE (D) OTHER

FIRE SERVICE INCORPORATED

90405

SUBSIDIARY OF FIRECOM INC.

39-27 FIFTY NINTH STREET
WOODSIDE, NEW YORK 11377
(718) 899-2311

REPORT OF FIELD SERVICE

INVOICE TO

SERVICED

W.T.C.
N.Y.C

CALL AUTHORIZED BY	CONTRACT #	FEE SERVICE #	FJ #	P O #	SEE AT JOB-SITE
	S/C 00 818				F.J.

PHONE	EXT	DATE SCHEDULED	TIME SCHEDULED	SERVICEMAN ASSIGNED
		8-2-00	A.M.	J. JAMES / F. ROSARIO

MATERIAL RECORD

QUANTITY ISSUED	QUANTITY B/O	FCI NO	DESCRIPTION	UNIT PRICE	PER	TOTAL AMOUNT
5			387 Bulbs (Bypass pnl's) -	N/C		

PREVENTIVE MAINTENANCE CONTRACT

AUTHORIZATION FOR FIRE ALARM INTERRUPTION

The undersigned has been advised by Fire Service, Inc. representative that it may be necessary to interrupt the fire protection service by disconnecting the system and/or a component in the performance of their assigned work.

The undersigned hereby assumes the responsibility for the notification of the authorities at the time the interruption is initiated and will take all of the precautions deemed necessary during this period of interruption and hold harmless Fire Service Inc. and its employees regarding interruption of fire protection service during their service of the equipment

Date

Name

CHECK APPROPRIATE BOX

- ☐ O C
- ☐ I & T
- ☐ FEE CALL
- ☐ DELIVERY
- ☐ DEMO
- ☐ EMERGENCY CALL
- ☑ CONTRACT CALL
- ☐ PICK UP
- ☐ DEMO OWNER
- ☐ SURVEY

DEPARTED SHOP	TIME IN	TIME OUT	RETURNED SHOP	TOTAL HOURS	START MILEAGE	END MILEAGE	MISC EXPENSE	CAR FARE
	8N	430						

- ☐ MAT RECD
- ☐ PARTIAL
- ☐ OTHER
- ☐ LABOR RECD

SERVICE DATE: 8-2-00

CUSTOMER SIGNATURE: Sean O'Keeffe

I & T COMPLETE ☐ CALL COMPLETE ☐

WILL RETURN ON

SERVICEMAN SIGNATURE

PROBLEM—AS DESCRIBED: Service Contract / Status Repairs. ~~Trouble Shooting~~. - Travel.

SERVICE PERFORMED: As per Contract - Trouble shooting / Repairs done as:
45th Fl Tamper S/W 2-147 Transponder - Reset O.K.
42nd Fl Tamper S/W 1-139 Transponder - Reset O.K.
34th Fl W/Flow S/W. 2-099. Transponder - Reset O.K.
20th Fl Tamper S/W 1-143 Transponder - Reset O.K.
Ground Level Located in 'B' Riser Stair Standpipe -
Also Replaced (5) Lamps/Bulbs on F.C. Station Bypass panel's/Floor's -
NOTE: Live Test/Solomon Floors 42 + 43rd A.C. Shutdowns - Postponed For New Date.

WORK REMAINING: After Hours As per Mr. J. Harrand / Mr. Campbell - Solomon Smith Barney + Cushman Wakefield. - Firedog will be Notified. -

FCI 155
REV 6186

FIRE SERVICE INCORPORATED

90404

SUBSIDIARY OF FIRECOM INC.
39-27 FIFTY NINTH STREET
WOODSIDE, NEW YORK 11377
(718) 899-2311

REPORT OF FIELD SERVICE

INVOICE TO

SERVICED

7 W.T.C.
SILVERSTEIN PROPERTIES —
N.Y.C.

CALL AUTHORIZED BY	CONTRACT #	FEE SERVICE #	FJ #	PO #	SEE AT JOB SITE
R.T.	SIC 00 818				F.S.7

PHONE	EXT	DATE SCHEDULED	TIME SCHEDULED	SERVICEMAN ASSIGNED
		8-1-00	AM	J. TORRES. F. ROSARIO

MATERIAL RECORD

QUANTITY ISSUED	QUANTITY B/O	FCI NO	DESCRIPTION	UNIT PRICE	PER	TOTAL AMOUNT
15			7387 LAMPS. DISPLAY F.C.S.	N/C		

PREVENTIVE MAINTENANCE CONTRACT

AUTHORIZATION FOR FIRE ALARM INTERRUPTION

The undersigned has been advised by Fire Service Inc. representative that it may be necessary to interrupt the fire protection service by disconnecting the system and/or a component in the performance of their assigned work.

The undersigned hereby assumes the responsibility for the notification of the authorities at the time the interruption is initiated and will take all of the precautions deemed necessary during the period of interruption and hold harmless Fire Service Inc. and its employees regarding interruption of the protection service during their service of the equipment

Date

X

Name

CHECK APPROPRIATE BOX

- ☐ Q.C
- ☐ I & T
- ☐ FEE CALL
- ☐ DELIVERY
- ☐ DEMO
- ☐ EMERGENCY CALL
- ☒ CONTRACT CALL
- ☐ PICK UP
- ☐ DEMO OWNER
- ☐ SURVEY

DEPARTED SHOP	TIME IN	TIME OUT	RETURNED SHOP	TOTAL HOURS	START MILEAGE	END MILEAGE	MISC EXPENSE	CAR FARE
	8 AM	4:30						

☐ MAT REQD ☐ PARTIAL ☐ OTHER ☐ LABOR REQD

SERVICE DATE: 8-1-00

WILL RETURN ON:

I & T COMPLETE ☐ CALL COMPLETE ☐

CUSTOMER SIGNATURE: Sean O'Keeffe

SERVICEMAN SIGNATURE:

PROBLEM—AS DESCRIBED: SERVICE CONTRACT. —

SERVICE PERFORMED: AS PER REPORT ATTACH / REPAIRS ON 36TH FL. PAGE. - TRACED WIRING FOUND OPEN WIRES (BROKEN) BY SPEAKER/STROBE (NORTH WEST WALL). - ALSO ATTACH FOR INSTRUMENT 7239 P.C. AT F.C. STATION 9TH FL. PAGE / REPAIRS I.C. 4512 REPLACED - BACK TO OPERATION. - FIRE ALARM STATION DISPLAY LAMPS (BOARD OUT) REPLACED 7387 TYPE - (11) UNITS REPLACED ALSO TROUBLE STATUS. - (4) 7387 CLEAR ALARM STATUS. - REPLACED BACK TO OPERATION. - NOTE: AS PER CONVERSATION WITH MR. JERRY MARZANO CONSTRUCTION MANAGER - SILVERSTEIN PROPERTIES. A SEQUENCE TEST / LIVE SHUTDOWNS FOR 42 & 43 FL. AS REQUESTED BY D. TRAVINO FIRE WAY. - SET TOMORROW 8-2-00 / 9:00 AM. -

WORK REMAINING: CONTINUE S/C. —

FCI 155
REV 6186

FIRE SERVICE INCORPORATED

90403

SUBSIDIARY OF FIRECOM INC.
39-27 FIFTY NINTH STREET
WOODSIDE, NEW YORK 11377
(718) 899-2311

REPORT OF FIELD SERVICE

INVOICE TO

SERVICED

7 W.T.C.
Silverstein Properties
N.Y.C.

CALL AUTHORIZED BY	CONTRACT #	FEE SERVICE #	FJ #	P O #	SEE AT JOB SITE
L.T.	S/C 00 818				F.J.D.

PHONE	EXT	DATE SCHEDULED	TIME SCHEDULED	SERVICEMAN ASSIGNED
		7-31-00	AM	J. Torres F. Rosario

MATERIAL RECORD

QUANTITY ISSUED	QUANTITY B/O	FCI NO	DESCRIPTION	UNIT PRICE	PER	TOTAL AMOUNT
2			(12 VLT) Batteries Strobe PNL AFC 100	6995		

PREVENTIVE MAINTENANCE CONTRACT

AUTHORIZATION FOR FIRE ALARM INTERRUPTION

The undersigned has been advised by Fire Service Inc. representative that it may be necessary to interrupt the fire protection service by disconnecting the system and/or a component in the performance of their assigned work.
The undersigned hereby assumes the responsibility for the notification of the authorities at the time the interruption is initiated and will take all of the precautions deemed necessary during the period of interruption and hold harmless Fire Service Inc. and its employees regarding interruption of fire protection service during their service of the equipment

Date

Name

CHECK APPROPRIATE BOX

- ☐ QC
- ☐ I&T
- ☐ FEE CALL
- ☐ DELIVERY
- ☐ DEMO
- ☐ EMERGENCY CALL
- ☒ CONTRACT CALL
- ☐ PICK UP
- ☐ DEMO OWNER
- ☐ SURVEY

DEPARTED SHOP	TIME IN	TIME OUT	RETURNED SHOP	TOTAL HOURS	START MILEAGE	END MILEAGE	MISC EXPENSE	CAR FARE
8AM	9AM AM	3:30 PM.						

- ☐ MAT REQD ☐ PARTIAL
- ☐ OTHER ☐ LABOR REQD

I&T COMPLETE ☐ CALL COMPLETE ☐

SERVICE DATE: 7-31-00

WILL RETURN ON:

CUSTOMER SIGNATURE: Sean Overeff.

SERVICEMAN SIGNATURE:

PROBLEM—AS DESCRIBED S/Contract - Repairs -

SERVICE PERFORMED As per Control / Repairs done on 45th FL Strobe panel (3) Panel AFC 100 Intermittent - Signal Trouble - Panel Reading - changes done/updated - Inspected Wiring back to Operation; also Batteries (2) Unit 12 VLT. Replaced). - Also as per Status Check Repairs on 22nd Fl. AFC 101 panel (2) - Trouble Condition Both Side - Panel - - Output Voltage Check Battery - Low - Back to operation. - North Side Unit Found Loose Connection on Unit Ceiling Type. - (East Side.) Also - Repaired back to operation. - System Ok / Reset back to operation

WORK REMAINING Certificate S/C.

FCI 155
REV 8186

FIRE SERVICE INCORPORATED

22347

Subsidiary of Firecom, Inc.
39-27 Fifty Ninth Street
Woodside, New York 11377
(718) 899-2311

REPORT OF FIELD SERVICE

LOCATIONS | **DEVICES**

FLOOR			CABLE	STATION	
45	D/DETECTOR		4 - 125	= WIRES PULLOUT NOT LONGER TTB	
45	D/DETECTOR		4 - 126	= WIRES PULLOUT TTB NOT LONGER	
44	S/SYSTEM		4 - 228	WIRES PULL OUT TTB NOT LONGER -	
45	FAN SHUTDOWN/ STATUS TF45-2		4 - 345	WIRES PULL OUT NOT LONGER TTB	
45	FAN SHUTDOWN STATUS		4 - 350	WIRES PULL OUT TTB NOT LONGER	
45	STROBE PULL TRACK (PAD-2)		4 - 359	E.O.L. DEVICE WRONG VALUE (CORRECTED) - (UNIT REMOVED) PAD-2	
43	TAMPER SW		4 - 439	WIRES PULL OUT TTB NOT LONGER	

INVOICE TO: J.W.T.C
N.Y.C

SERVICEMAN ASSIGNED	SEE AT JOB SITE
J. TOLLES H. ROSARIO	F.J.F.
Zinger A.	DATE SCHEDULED 7-26-00
CONTRACT # S/C 00 818	TYPE OF SYSTEM 8 UD
FEE SERVICE #	P.O. #
CALL AUHTORIZED BY	PHONE / EXT
☒ MAINTENANCE	☐ TEST
☐ JOB COMPLETE	☐ JOB INCOMPLETE
☐ SYSTEM ON LINE	☐ SYSTEM OFF LINE

AUTHORIZATION FOR FIRE ALARM INTERRUPTION
The undersigned has been advised by Fire Service Inc. representative that it may be necessary to interrupt the fire protection service by disconnecting the system and/or a component in the performance of their assigned work.
The undersigned hereby assumes the responsibility for the notification of the authorities at the time the interruption is initiated and will take all of the precautions deemed necessary during this period of interruption and hold harmless Fire Service Inc. and its employees regarding interruption of the protection service during their service of the equipment.

NAME _____ DATE _____ TIME _____

DEPARTED SHOP	TIME IN	TIME OUT	RETURNED SHOP	TOTAL HOURS
AM PM	8 AM PM	9:30 AM PM	AM PM	

MATERIAL RECORD

QUANTITY	DESCRIPTION	COST
	PREVENTIVE MAINTENANCE CONTRACT	

CUSTOMER NAME (PRINT) P. Keller (For J Cerup)
CUSTOMER SIGNATURE (For J Cerup)
SERVICEMAN SIGNATURE

SERVICE PERFORMED & REMAINING: As per Contract - Check Trouble shooting / Corrected Short Circuits / TTB's Check For Wiring / Pull out Units not longer on Field Detector - Also Corrected Wiring on PAD-2 Strobe panel adding on 45A. Wrong End of Line Resistor (1.8) Found on Relay Interface Terminal - Placed 3.9K2 E.O.L. & Unit Rewired - Check back to normal - Also As per Mr. P. Keller will Forward Recevaled Fire Command Station Blue Prints / With Existing Labeling / Wiring Basement / Elevator

(A) INACCESSIBLE (B) MISSING (C) DEFECTIVE (D) OTHER

- Copy Returned to Shop / Filed -

FIRE SERVICE INCORPORATED

80966

SUBSIDIARY OF FIRECOM INC.
39-27 FIFTY NINTH STREET
WOODSIDE, NEW YORK 11377
(718) 899-2311

REPORT OF FIELD SERVICE

INVOICE TO

SERVICED
7 W.T.C.
N.Y.C. -

CALL AUTHORIZED BY	CONTRACT #	FEE SERVICE #	FJ #	P O #	SEE AT JOB SITE
R.T.	S/C 00818				F.S.D

PHONE	EXT	DATE SCHEDULED	TIME SCHEDULED	SERVICEMAN ASSIGNED
		7-25-00	A.M.	C. TORRES F. ROSARIO

MATERIAL RECORD

QUANTITY ISSUED	QUANTITY B/O	FCI NO	DESCRIPTION	UNIT PRICE	PER	TOTAL AMOUNT
			PREVENTIVE MAINTENANCE CONTRACT			
			CONTRACT			

AUTHORIZATION FOR FIRE ALARM INTERRUPTION

The undersigned has been advised by Fire Service, Inc. representative that it may be necessary to interrupt the fire protection service by disconnecting the system and/or a component in the performance of their assigned work.

The undersigned hereby assumes the responsibility for the notification of the authorities at the time the interruption is initiated and will take all of the precautions deemed necessary during the period of interruption and hold harmless Fire Service Inc. and its employees regarding interruption of fire protection service during their service of the equipment.

Date

Name

CHECK APPROPRIATE BOX

- ☐ Q.C
- ☐ I & T
- ☐ FEE CALL
- ☐ DELIVERY
- ☐ DEMO
- ☐ EMERGENCY CALL
- ☒ CONTRACT CALL
- ☐ PICK UP
- ☐ DEMO OWNER
- ☐ SURVEY

DEPARTED SHOP	TIME IN	TIME OUT	RETURNED SHOP	TOTAL HOURS	START MILEAGE	END MILEAGE	MISC EXPENSE	CAR FARE
	800	430						

☐ MAT REQD ☐ PARTIAL
☐ OTHER ☐ LABOR REQD

SERVICE DATE 7-25-00

CUSTOMER SIGNATURE P. Kelly (Fr Servs)

I & T COMPLETE ☐ CALL COMPLETE ☐

WILL RETURN ON

SERVICEMAN SIGNATURE

PROBLEM—AS DESCRIBED S/CONTRACT - REPAIR STROBE LIGHT PANELS - CKTS. 32ND FL. LEAVING FAULT CONDITION. - 47TH FL. S/DETECTOR AREA. -

SERVICE PERFORMED CONTRACT REPAIR 32ND FL. STROBE LIGHT CKT #1. TRACE LOCATED NEGATIVE WIRE GROUNDED ON EXISTING CEILING SPEAKER/STROBE WHITE UNIT. - REMOVE CEILING TO INSTALL NEW CEILING TILES. - CORRECTED FAULTY CKT BACK TO NORMAL/TESTED O.K. - ALSO CHECK 47TH FL. 'B' COMMUNICATING CLOSET S/DETECTOR NOT OPERATING. - N/G. - UNABLE TO REACH UNIT DUE TO CEILING PIPES IN WAY. - ACCESS MUST BE PROVIDED BY BLD. - TO CUT HOLE ON WALL NEAR S/D. FOR ~~PORTION~~ LOWER TO REMOVE UNIT AT BASE CEILING. -

WORK REMAINING CONTRACT S/C.

FCI 155

FIRE SERVICE INCORPORATED 76790

SUBSIDIARY OF FIRECOM INC.

39-27 FIFTY NINTH STREET
WOODSIDE, NEW YORK 11377
(718) 899-2311

REPORT OF FIELD SERVICE

INVOICE TO

SERVICED

7 W. T. C.
N. Y. C.

CALL AUTHORIZED BY	CONTRACT #	FEE SERVICE #	FJ #	P O #	SEE AT JOB SITE
P.T.	SIC 00 818				

PHONE	EXT.	DATE SCHEDULED	TIME SCHEDULED	SERVICEMAN ASSIGNED
		7-19-00	9A	J. TORAH F. ROSARIO

MATERIAL RECORD

QUANTITY ISSUED	QUANTITY B/O	F.C.I. NO	DESCRIPTION	UNIT PRICE	PER	TOTAL AMOUNT
			PREVENTIVE MAINTENANCE CONTRACT			

AUTHORIZATION FOR FIRE ALARM INTERRUPTION

The undersigned has been advised by Fire Service Inc. representative that it may be necessary to interrupt the fire protection service by disconnecting the system and/or a component in the performance of their assigned work.

The undersigned hereby assumes the responsibility for the notification of the authorities at the time the interruption is initiated and will take all of the precautions deemed necessary during the period of interruption and hold harmless Fire Service Inc. and its employees regarding interruption of the protection service during their service of the equipment.

Date

X

Name

CHECK APPROPRIATE BOX

- ☐ Q.C
- ☐ I & T
- ☐ FEE CALL
- ☐ DELIVERY
- ☐ DEMO
- ☐ EMERGENCY CALL
- ☑ CONTRACT CALL
- ☐ PICK UP
- ☐ DEMO OWNER
- ☐ SURVEY

DEPARTED SHOP	TIME IN	TIME OUT	RETURNED SHOP	TOTAL HOURS	START MILEAGE	END MILEAGE	MISC EXPENSE	CAR FARE
	8N	430						

☐ MAT RECD ☐ PARTIAL
☐ OTHER ☐ LABOR RECD

SERVICE DATE: 7-19-00

CUSTOMER SIGNATURE: Pierre (for J. Cerupt)

I & T COMPLETE ☐ CALL COMPLETE ☐

WILL RETURN ON:

SERVICEMAN SIGNATURE: [signature] [signature]

PROBLEM—AS DESCRIBED Service Callback —

SERVICE PERFORMED As per Callback performed Check Trouble shooting Repairs on Strobe panel unit on 32nd Fl. Effect for CKT #1 Ground Fault. — E.O.L. placed at Terminal. — Further Troubleshooting effected on CKT #1 in order to locate Unit/Units grounded. — Floor Rehabilitated Effect. — Also Notify Tech Robert Nakoski Checking Activation/outputs 'DRY' — on Floor's 42nd/43rd at Lobby Shop/R.W. — Finding — See Print Out — Submitted by Tech. — Smoke Det. Activating Various CKTS. / Zones on Floor's —

WORK REMAINING Contact Callback —

FCI 155
REV 6186

FIRE SERVICE INCORPORATED 76789

SUBSIDIARY OF FIRECOM INC.

39-27 FIFTY NINTH STREET
WOODSIDE, NEW YORK 11377
(718) 899-2311

REPORT OF FIELD SERVICE

INVOICE TO

SERVICED

7 W.T.C.
N.Y.C.

CALL AUTHORIZED BY	CONTRACT #	FEE SERVICE #	FJ #	P.O. #	SEE AT JOB SITE
T.T.	SC00 818				F.S.I

PHONE	EXT	DATE SCHEDULED	TIME SCHEDULED	SERVICEMAN ASSIGNED
		7-18-00		J. Tang F. Rosado

MATERIAL RECORD

QUANTITY ISSUED	QUANTITY B/O	FCI NO	DESCRIPTION	UNIT PRICE	PER	TOTAL AMOUNT
			PREVENTIVE MAINTENANCE CONTRACT			

AUTHORIZATION FOR FIRE ALARM INTERRUPTION

The undersigned has been advised by Fire Service, Inc. representative that it may be necessary to interrupt the fire protection service by disconnecting the system and/or a component in the performance of their assigned work.

The undersigned hereby assumes the responsibility for the notification of the authorities at the time the interruption is initiated and will take all of the precautions deemed necessary during the period of interruption and hold harmless Fire Service Inc. and its employees regarding interruption of the protection service during their service of the equipment.

Date

X

Name

CHECK APPROPRIATE BOX

- ☐ Q.C
- ☐ I & T
- ☐ FEE CALL
- ☐ DELIVERY
- ☐ DEMO
- ☐ EMERGENCY CALL
- ☑ CONTRACT CALL
- ☐ PICK UP
- ☐ DEMO OWNER
- ☐ SURVEY

DEPARTED SHOP	TIME IN	TIME OUT	RETURNED SHOP	TOTAL HOURS	START MILEAGE	END MILEAGE	MISC EXPENSE	CAR FARE
800	900	430						

☐ MAT REQD ☐ PARTIAL
☐ OTHER ☐ LABOR REQD

I & T COMPLETE ☐ CALL COMPLETE ☐

SERVICE DATE 7-18-00

WILL RETURN ON

CUSTOMER SIGNATURE Pkuu (For J. Cauffield)

SERVICEMAN SIGNATURE

PROBLEM—AS DESCRIBED Service Contract / Strobes Lights Heads Units —

SERVICE PERFORMED As per Contract preformed check's Report on 15th Fl. Strobe panel Trouble Activating — AFC 100 Unit repaired / P.C. and Battries replaced Voltage insure to 28.99 VDC. — Back up — Normalized also Strobe Lights CKT #1 on 12th Fl. panel - Found Unit Wiring loose. — corrected. — Units back to operating. — AFC 101 #1 System Unit Back to operating. —

WORK REMAINING

FCI 155
REV 6186

FIRE SERVICE INCORPORATED

22345

Subsidiary of Firecom, Inc.
39-27 Fifty Ninth Street
Woodside, New York 11377
(718) 899-2311

REPORT OF FIELD SERVICE

LOCATIONS			DEVICES				
FLOOR	FREIGHT AREA	TST CLEAN	TTB'S		STROBE/HRN'S	
6	'B' COMM.	✓	TTB	(1)	AFC 101	(1)
	CORE AREA	✓	TTB	(1) C3		
	'B' STAIR		TTB	(1) C1		
5	W. HALL (SCHWAB)	✓	TTB (1)	DIC3		
	W. HALL (SCHWAB)	✓	TTB (1)	C3		
	'B' STAIR	✓	TTB (1)	DIC1		
4	'B' COMM	✓	—		AFC 100	(1)
3	'B' STAIR	✓	TTB (1)	DIC1		
	'B' COMM.	✓			AFC 100	(1)
2	FREIGHT AREA	✓			AFC 100	(1)
1	HALL (SCHWAB)	—				
	PUMP RM	✓	TTB (1)	DIC1		
	PUMP RM	✓			AFC 100	(1)
		—	—			
B	F.C. STA. BY PASS PNL. RELAMP. (4) LIGHTS					

INVOICE TO:
T.W.T.C.
N.Y.C.

SERVICEMAN ASSIGNED: J. TORRES / F. ROSARIO	SEE AT JOB SITE: F.S.I
CONTRACT #: S/C 00 818	DATE SCHEDULED: 7-12-00
FEE SERVICE #	TYPE OF SYSTEM: 8500
CALL AUTHORIZED BY	P.O. #
	PHONE / EXT

☒ MAINTENANCE ☐ TEST
☐ JOB COMPLETE ☐ JOB INCOMPLETE
☐ SYSTEM ON LINE ☐ SYSTEM OFF LINE

DEPARTED SHOP	TIME IN	TIME OUT	RETURNED SHOP	TOTAL HOURS
AM PM	8:00 AM PM	4:30 AM PM	AM PM	

MATERIAL RECORD

QUANTITY	DESCRIPTION	COST
3	LAMPS 387 / BY PASS PNL.	N/C

PREVENTIVE MAINTENANCE CONTRACT

CUSTOMER NAME (PRINT): PRINTED / FOR J CORNYEN
CUSTOMER SIGNATURE: FOR J CORNYEN
SERVICEMAN SIGNATURE: [signature]

AUTHORIZATION FOR FIRE ALARM INTERRUPTION
The undersigned has been advised by Fire Service Inc. representatives that it may be necessary to interrupt the fire protection service by disconnecting the system and/or a component in the performance of their assigned work.
The undersigned hereby assumes the responsibility for the notification of the authorities at the time the interruption is initiated and will take all of the precautions deemed necessary during the period of interruption and hold harmless Fire Service Inc. and its employees regarding interruption of the protection service during their service of the equipment.

NAME / DATE / TIME

SERVICE PERFORMED & REMAINING: S/CONTRACT.

PERF MAINTENANCE ON TTB'S, RISER & STROBE PANELS & LISTED VOLTAGES / SIGNAL / AUDIBLE EFFECT. WIRING, BEARING, BATTERIES CHECK. ACK / RESET BACK TO OPERATION

(A) INACCESSIBLE (B) MISSING (C) DEFECTIVE (D) OTHER

FIRE SERVICE INCORPORATED

22346

Subsidiary of Firecom, Inc.
39-27 Fifty Ninth Street
Woodside, New York 11377
(718) 899-2311

REPORT OF FIELD SERVICE

LOCATIONS		DEVICES				
FLOOR	AREAS	TTB'S		STRBS PNL		TST & CLEAN
11	'B' COMM			AFC 101 (2)		✓
				⊕ BATTERIES Replaced).		
10	N/A	UNAVOIDABLE		—		
9	N/A PREVENTIVE MAINTENANCE CONTRACT			—		
8	'B' COMM			AFC 101 (1)		✓
7	'B' COMM			AFC 101 (1)		✓
7	CORE HER	TTB (1)	D1C1			✓
6	'B' COMM			AFC 100 (1)		
6	'B' STAIR	TTB (1)	D1C1			✓
6	ENG. HER RM	TTB (1)	D3C3			✓
5	'B' COMM			⊕ AFC 100 (1) DISABLE BAT		
5	'B' STAIR	TTB (1)	D1C1			✓
5	W. HER.	TTB (2)	D3C3			✓
4	'B' COMM			AFC 100 (1)		✓
3	'B' COMM			AFC 100 (1)		✓
3	'B' STAIR	TTB (1)	D1C1			✓
2	FREIGHT AREA			AFC 100 (1)		✓
1	PUMP RM	TTB (1)	D1C1			✓
1	PUMP RM.			AFC 100 (1)		✓

INVOICE TO: 7 W.T.C
N.Y.C.

SERVICEMAN ASSIGNED: L. TORRES / F. ROSARIO	SEE AT JOB SITE: F.S.D.
	DATE SCHEDULED: 7-11-00
CONTRACT #: S/C 00 818	TYPE OF SYSTEM: 8500
FEE SERVICE #	P.O. #
CALL AUHTORIZED BY	PHONE / EXT

☑ MAINTENANCE ☑ TEST
☐ JOB COMPLETE ☐ JOB INCOMPLETE
☐ SYSTEM ON LINE ☐ SYSTEM OFF LINE

DEPARTED SHOP	TIME IN	TIME OUT	RETURNED SHOP	TOTAL HOURS
AM / PM	800 AM	430 PM	AM / PM	

MATERIAL RECORD

QUANTITY	DESCRIPTION	COST
2	12 VOLT 7 AH BATTERIES	$69.95
	PREVENTIVE MAINTENANCE CONTRACT	

CUSTOMER NAME (PRINT): PAT KINNILL (Fr J. Corrigan)
CUSTOMER SIGNATURE: Pat Kinnill
SERVICEMAN SIGNATURE: L. Torres / Frank Lomanto

AUTHORIZATION FOR FIRE ALARM INTERRUPTION
The undersigned has been advised by Fire Service Inc. representative that it may be necessary to interrupt the fire protection service by disconnecting the system and/or a component in the performance of their assigned work.
The undersigned hereby assumes the responsibility for the notification of the authorities at the time the interruption is initiated and will take all of the precautions deemed necessary during the period of interruption and hold harmless Fire Service Inc. and its employees regarding interruption of fire protection service during their service of the equipment.

NAME / DATE / TIME

SERVICE PERFORMED & REMAINING: S/CONTRACT - PREVENTIVE MAINTENANCE ON TTB'S (Chirs / Steven) Paul Rosen's Manager / Security Officer - Batteries (Back UPS Replaced) (2) (11th Floor) - System Reset Back to operation

(A) INACCESSIBLE (B) MISSING (C) DEFECTIVE (D) OTHER

FIRE SERVICE INCORPORATED

22344

Subsidiary of Firecom, Inc.
39-27 Fifty Ninth Street
Woodside, New York 11377
(718) 899-2311

REPORT OF FIELD SERVICE

LOCATIONS		DEVICES				
FLOOR			TTB's		STRB/PAL	TEST OKAY
30	CORE HER			(1)	AFC 100	✓
19	CORE HER			(1)	AFC 100	✓
18	CORE HER	(1)	TTB D1C1	(2)	AFC 100	✓
		(1)	TTB D3C3			
17	CORE HER			(1)	AFC 100	✓
16	CORE HER			(1)	AFC 100	✓
15	CORE HER	(2)	TTB D1C1	(1)	AFC 100	✓
		(1)	TTB D3C3			
14	CORE HER			(1)	MAZ	✓
13	'B' COMM			(1)	AFC 100	✓
	'C' ELEC			(1)	AFC 101	✓
12	CORE HER	(2)	TTB D1C1			
		(1)	TTB D3C3			
12	'B' COMM.			(2)	AFC 101	✓
(B) 22	STROBE PNL - SOUTH	(2)	BATT. REPLACED			12 VOLT BATTS

INVOICE TO: TWTC
NYC

SERVICEMAN ASSIGNED: J. TOLEDO / C. TABARES	SEE AT JOB SITE: F.S.I
CONTRACT #: S/C 00 818	DATE SCHEDULED: 7-5-00
FEE SERVICE #	TYPE OF SYSTEM: 8500
CALL AUHTORIZED BY	PO #: PHONE: EXT:

☒ MAINTENANCE ☒ TEST
☐ JOB COMPLETE ☐ JOB INCOMPLETE
☐ SYSTEM ON LINE ☐ SYSTEM OFF LINE

DEPARTED SHOP	TIME IN	TIME OUT	RETURNED SHOP	TOTAL HOURS
AM/PM	800 AM	430 PM	AM/PM	

AUTHORIZATION FOR FIRE ALARM INTERRUPTION
The undersigned has been advised by Fire Service Inc. representative that it may be necessary to interrupt the fire protection service by disconnecting the system and/or a component in the performance of their assigned work.
The undersigned hereby assumes the responsibility for the notification of the authorities at the time the interruption is initiated and will take all of the precautions deemed necessary during the period of interruption and hold harmless Fire Service Inc. and its employees regarding interruption of fire protection service during their service of the equipment.

TIME / DATE / NAME

MATERIAL RECORD

QUANTITY	DESCRIPTION	COST
2	BATTERIES 12V 7AH. (STROBE PNL) - L	@ 69 95
	PREVENTIVE MAINTENANCE CONTRACT	

CUSTOMER NAME (PRINT): SILVERSTEIN
CUSTOMER SIGNATURE:
SERVICEMAN SIGNATURE:

SERVICE PERFORMED & REMAINING: Perf. MAINTENANCE - As per Checklist Check TEST Batteries / Sequence on TTB's Risers & STROBE PANEL'S on Floors Above Listed. - System Act/Test in operation @ 22nd FL. (2) Batteries Replaced. - OK. -

(A) INACCESSIBLE (B) MISSING (C) DEFECTIVE (D) OTHER

FIRE SERVICE INCORPORATED

22343

Subsidiary of Firecom, Inc.
39-27 Fifty Ninth Street
Woodside, New York 11377
(718) 899-2311

REPORT OF FIELD SERVICE

LOCATIONS			DEVICES				
FLOOR			TTB'S	STROBE/PULL		73T Clean	
26	CORE HER			(1) PYRO 3'		✓	
25	CORE HER			(1) AFC100		✓	
24	CORE HER.		(2) TTB'S DIC1 (1) TTB DISC	(1) AFC100		✓	
23	N/A AT THIS TIME. (MAYOR'S OFFICE)						
22	'B' ROOM			(2) AFC101		✓	
				(1) BATT. NEEDED (1) SLF.			
21	CORE HER		(1) TTB DIC (1) TTB DISC	(1) AFC100		✓	

INVOICE TO: TWTC
N.Y.C

SERVICEMAN ASSIGNED: J. Tough & Tobias	SEE AT JOB SITE: F.S.I.
	DATE SCHEDULED: 7.3.00
CONTRACT #: S/C 00 818	TYPE OF SYSTEM: 8-500
FEE SERVICE #	P.O. #
CALL AUHTORIZED BY	PHONE / EXT

☒ MAINTENANCE ☒ TEST
☐ JOB COMPLETE ☐ JOB INCOMPLETE
☐ SYSTEM ON LINE ☐ SYSTEM OFF LINE

DEPARTED SHOP	TIME IN	TIME OUT	RETURNED SHOP	TOTAL HOURS
8:00 AM PM	9:00 AM PM	3:30 AM PM	AM PM	

MATERIAL RECORD

QUANTITY	DESCRIPTION	COST
	PREVENTIVE MAINTENANCE CONTRACT	

CUSTOMER NAME (PRINT): SILVERSTEIN
CUSTOMER SIGNATURE:
SERVICEMAN SIGNATURE:

AUTHORIZATION FOR FIRE ALARM INTERRUPTION
The undersigned has been advised by Fire Service Inc. representative that it may be necessary to interrupt the fire protection service by disconnecting the system and/or a component in the performance of their assigned work.
The undersigned hereby assumes the responsibility for the notification of the authorities at the time the interruption is initiated and will take all of the precautions deemed necessary during the period of interruption and hold harmless Fire Service Inc. and its employees regarding interruption of the protection service during their service of the equipment.

NAME DATE TIME

SERVICE PERFORMED & REMAINING: S/CONTRACT - PREV. MAINTENANCE CHECK ON TTB'S RISERS PANEL'S UNITS. - / STROBES LIGHTS PANEL'S on FLOOR'S ABOVE LISTED. - UNITARY / SIGNAL'S REMAINS TAKEN - / WIRELESS CHECK - BOTTOM CHECK.

AS: 22ND FL. STROBE PULL 'SOUTH' AFC101 NEEDS (2) BATTERIES 12VOLTS. 7AMP/H. - TO REPLACE. -

(A) INACCESSIBLE (B) MISSING (C) DEFECTIVE (D) OTHER

FIRE SERVICE INCORPORATED

22341

Subsidiary of Firecom, Inc.
39-27 Fifty Ninth Street
Woodside, New York 11377
(718) 899-2311

REPORT OF FIELD SERVICE

LOCATIONS		DEVICES				
FLOOR			TTB's		STROBES	TST CLEANS
	B' COMM. (CLOSET)					
31	'B' COMM	(1) TTB 22 A/B 23C3			AFC 100 (1)	✓
				(1)	Battery Replaced	Trouble
30	'B' COMM				(1) AFC 100	✓
				(2)	Batteries Replaced OK	
30	CORE MEZ	(1) TTB DK1 #13 A/B - Key Closet Monitor (B)				
29	'B' COMM.				AFC 100 (1)	✓
					OK.	
28	'B' COMM.	(1) TTB 23C3 #21 A/B			AFC 100 (1)	✓
27	CORE MEZ	(1) TTB #12 A/B			RLO 3 SSH	✓
					OK.	
32	FLOOR PAGE / BACK TO NORMAL / RESOLVED (FLOOR RENOVATION)					

PREVENTIVE MAINTENANCE CONTRACT

INVOICE TO: J.W.T.C.
N.Y.C

SERVICEMAN ASSIGNED: J. Tourge / C. Tabaret
SEE AT JOB SITE: F.S.I
DATE SCHEDULED: 6-28-00
CONTRACT #: S/C 00 818
TYPE OF SYSTEM: 8 VT
FEE SERVICE #:
P O #:
CALL AUHTORIZED BY:
PHONE:
EXT:

☐ MAINTENANCE ☑ TEST
☐ JOB COMPLETE ☐ JOB INCOMPLETE
☐ SYSTEM ON LINE ☐ SYSTEM OFF LINE

DEPARTED SHOP	TIME IN	TIME OUT	RETURNED SHOP	TOTAL HOURS
AM PM	708 AM PM	430 AM PM	AM PM	

MATERIAL RECORD

QUANTITY	DESCRIPTION	COST
4	BATTERIES 12VDS.	69.95
—	ST CLOSET PANEL (AFC100)	

CUSTOMER NAME (PRINT): SILVERSTEIN
CUSTOMER SIGNATURE:
SERVICEMAN SIGNATURE:

AUTHORIZATION FOR FIRE ALARM INTERRUPTION
The undersigned has been advised by Fire Service Inc. representative that it may be necessary to interrupt the fire protection service by disconnecting the system and/or a component in the performance of their assigned work.
The undersigned hereby assumes the responsibility for the notification of the authorities at the time the interruption is initiated and will take all of the precautions deemed necessary during this period of interruption and hold harmless Fire Service Inc. and its employees regarding interruption of fire protection service during their service of the equipment.

NAME DATE TIME

SERVICE PERFORMED & REMAINING: S/CONTRACT.
CHECK/Repair on TTB's / STROBES / Panels & Perf. Maintenance as per list above. Also Batteries Replaced on 2 Strobes (Low Voltage) (2) Units on 30th Fl. Strobe Panel & 31st Fl.

(A) INACCESSIBLE (B) MISSING (C) DEFECTIVE (D) OTHER

NOTE: 31ST FL. PANEL DISABLED due to SHORTED CKT 'A'/B ON STROBES LOOPS —

FIRE SERVICE INCORPORATED

22342

Subsidiary of Firecom, Inc.
39-27 Fifty Ninth Street
Woodside, New York 11377
(718) 899-2311

REPORT OF FIELD SERVICE

LOCATIONS		DEVICES	
FLOOR		TTB'S	STROBE/PIV
35	B COMM		STROBE P/L. ✓ (2) BATT. to Replace
33	B COMM		(2) BATT. Replaced STROBE P/L
33	CORE HEF	(1) TTB D/C2 # KEY Cylinder Needed.	✓
32	B COMM	(1) TTB D3C3 # 23A/B	(1) Strobe P/L AFC 100 ✓
31	B COMM.		(1) STROBE P/L ✓ (2) BATT. Repl. AFC 100
37	B COMM		(1) AFC100 STROBE ✓ (2) BATT. Replaced OK
36	B COMM		(1) STBE P/L ✓ (2) BATTERIES Replaced

PREVENTIVE MAINTENANCE CONTRACT

INVOICE TO: T.W.T.C
W.T.C

SERVICEMAN ASSIGNED: J. TORREY / C. TABALES	SEE AT JOB SITE: FSI
CONTRACT #: SIC00818	DATE SCHEDULED: 6-27-00
FEE SERVICE #	TYPE OF SYSTEM: 8 SW
CALL AUHTORIZED BY	P.O. #
PHONE	EXT

☐ MAINTENANCE ☐ TEST
☐ JOB COMPLETE ☐ JOB INCOMPLETE
☐ SYSTEM ON LINE ☐ SYSTEM OFF LINE

DEPARTED SHOP	TIME IN	TIME OUT	RETURNED SHOP	TOTAL HOURS
800 AM PM	900 AM PM	430 AM PM	AM PM	

MATERIAL RECORD

QUANTITY	DESCRIPTION	COST
4	BATT. 12V LTS.	69.95
	STROBE P/L (AFC100)	

CUSTOMER NAME (PRINT) SILVERSTEIN
CUSTOMER SIGNATURE
SERVICEMAN SIGNATURE

AUTHORIZATION FOR FIRE ALARM INTERRUPTION
The undersigned has been advised by Fire Service Inc. representative that it may be necessary to interrupt the fire protection served by disconnecting the system and/or a component in the performance of their assigned work.
The undersigned hereby assumes the responsibility for the notification of the authorities at the time the interruption is initiated and will take all of the precautions deemed necessary during this period of interruption and hold harmless Fire Service Inc. and its employees regarding interruption of the protection service during their service of the equipment.

NAME DATE TIME

SERVICE PERFORMED & REMAINING S/C.

Perf. Maintenance Checks / Tests on TTB's & Strobes P/S's as Above Listed. — Batteries Replaced Also. — (Low Voltage) —

(A) INACCESSIBLE (B) MISSING (C) DEFECTIVE (D) OTHER

FIRE SERVICE INCORPORATED

22340

Subsidiary of Firecom, Inc.
39-27 Fifty Ninth Street
Woodside, New York 11377
(718) 899-2311

REPORT OF FIELD SERVICE

LOCATIONS		DEVICES		
FLOOR		TTB's	STROBE'S	TST MAINT
38	FREIGHT AREA 'B' COMM.	TTB 2GA/3(1) D3-4	AFC100 (1) ✓ ✱ BATT. NEED	
37	FREIGHT AREA 'B' COMM	TTB 25 A/B D3-4 (1)	AFC 100 (1) ✓ ✱ BATT. NEED	
36	FREIGHT AREA 'B' COMM		AFC 100 (1) ✓ ✱ BATT. NEEDED.	
36	SOUTH SIDE (WALL CLOSET)	TTB/OFF. SOUTH (1) D1-2 # 15 A-B		✓
35	FREIGHT AREA 'B' COMM		AFC 100 (1) ✓ ✱ BATT. NEEDED	
34	COPY AREA 'B' COMM. CONFIRM EAST	TTB D3-4 24A/B	AFC (100) ✓ AFC (102) ✓ AFC (10) ✓	
33	FREIGHT AREA 'B' COMM.		AFC 100 ✓ ✱ BATT. NEEDED	
33	CORE HER	✱ TTB (N/A) PENDING.		

INVOICE TO: 7W.T.C
N.Y.C.

SERVICEMAN ASSIGNED: J. TORRES / F. ROSARIO	SEE AT JOB SITE: F.S.I.
	DATE SCHEDULED: 6-21-00
CONTRACT #: S/C 00818	TYPE OF SYSTEM: 850
FEE SERVICE #	P.O. #
CALL AUHTORIZED BY	PHONE / EXT
☑ MAINTENANCE	☑ TEST
☐ JOB COMPLETE	☐ JOB INCOMPLETE
☐ SYSTEM ON LINE	☐ SYSTEM OFF LINE

DEPARTED SHOP	TIME IN	TIME OUT	RETURNED SHOP	TOTAL HOURS
AM / PM	800 AM	430 PM	AM / PM	

MATERIAL RECORD

QUANTITY	DESCRIPTION	COST
	PREVENTIVE MAINTENANCE CONTRACT	

CUSTOMER NAME (PRINT): SILVERSTEIN
CUSTOMER SIGNATURE:
SERVICEMAN SIGNATURE:

AUTHORIZATION FOR FIRE ALARM INTERRUPTION
The undersigned has been advised by Fire Service Inc. representative that it may be necessary to interrupt the fire protection service by disconnecting the system and/or a components in the performance of their assigned work.
The undersigned hereby assumes the responsibility for the notification of the authorities at the time the interruption is initiated and will take all of the precautions deemed necessary during this period of interruption and hold harmless Fire Service Inc. and its employees regarding interruption of fire protection service during their service of the equipment.

NAME / DATE / TIME

SERVICE PERFORMED & REMAINING: S/CONTRACT.

PREV. MAINTENANCE CHECK OF TTB'S (BOTH RISER'S) & STROBE PNL'S ON FLOOR'S 38/33 AS LISTED LOCATIONS. -
NOTE: BATTERIES LOW VOLTAGE. NEEDED ON 38/37/36/35/33 FLOOR'S (See Above)

(A) INACCESSIBLE (B) MISSING (C) DEFECTIVE (D) OTHER

to be Continued.

FIRE SERVICE INCORPORATED

22335

Subsidiary of Firecom, Inc.
39-27 Fifty Ninth Street
Woodside, New York 11377
(718) 899-2311

REPORT OF FIELD SERVICE

LOCATIONS		DEVICES				
FLOOR		TTB's		STRIPAN		TST. MAINT
44	FREIGHT ELEV. 'B' COMM			(1) AFC100		✓
43	FREIGHT AREA 'B' COMM	TTB	(1)	PAD2	(1)	✓
		29A/B		(SPARE)		✓
		D3/4				
42	OPPSITE RELIGTN. CLOSET WALL	TTB	(1)			✓
		D1/2				
	FREIGHT AREA 'B' COMM.	TTB	(1)			✓
		D3/4		(1) PAD2		✓
		28A/B		(SPARE)		
41	FREIGHT AREA 'B' COMM.			(1) PAD2		✓
				(SPARE)		
40	FREIGHT AREA 'B' COMM.	TTB	(1) D3/4	PAD2	(1)	✓
		27A/B		(SPARE)		
				AFC100		
39	FREIGHT AREA 'B' COMM.	[redacted]		PAD2 (100)	(1)	✓
39	OPP. AUDITH ENT. (WALL CLOSET)	TTB	(1) D1/2			✓

INVOICE TO: TW.TC. / N.Y.C. / J. CARRIGAN

SERVICEMAN ASSIGNED: J. TORRES / F. ROSARIO	SEE AT JOB SITE: F.S.I
	DATE SCHEDULED: 6-20-00
CONTRACT #: S/C00 818	TYPE OF SYSTEM: 8500
FEE SERVICE #	P.O. #
CALL AUHTORIZED BY	PHONE / EXT

☒ MAINTENANCE ☐ TEST
☐ JOB COMPLETE ☐ JOB INCOMPLETE
☐ SYSTEM ON LINE ☐ SYSTEM OFF LINE

DEPARTED SHOP	TIME IN	TIME OUT	RETURNED SHOP	TOTAL HOURS
AM / PM	810 AM / PM	430 AM / PM	AM / PM	

MATERIAL RECORD

QUANTITY	DESCRIPTION	COST
	PREVENTIVE MAINTENANCE CONTRACT	

CUSTOMER NAME (PRINT): SILVERSTEIN
CUSTOMER SIGNATURE
SERVICEMAN SIGNATURE

AUTHORIZATION FOR FIRE ALARM INTERRUPTION
The undersigned has been advised by Fire Service Inc. representative that it may be necessary to interrupt the fire protection services by disconnecting the system and/or a component in the performance of their assigned work.
The undersigned hereby assumes the responsibility for the notification of the authorities at the time the interruption is initiated and will take all of the precautions deemed necessary during this period of interruption and hold harmless Fire Service Inc. and its employees regarding interruption of fire protection service during this service of the equipment.

TIME / DATE / NAME

SERVICE PERFORMED & REMAINING: S/CONTRACT.

A PREVENTATIVE MAINTENANCE CHECK FOR OPERATING VOLTAGES, LOOPS, WIRING ON TTB'S, RISER & STROBES PANELS AS LISTED (ABOVE) — UNITS ALSO WERE DUSTED OFF / CLEANED. — OLD WIRE (PAINTED) PULLOUT CASSETTES. — TO BE CONTINUED. —

(A) INACCESSIBLE (B) MISSING (C) DEFECTIVE (D) OTHER

FIRE SERVICE INCORPORATED

22339

Subsidiary of Firecom, Inc.
39-27 Fifty Ninth Street
Woodside, New York 11377
(718) 899-2311

REPORT OF FIELD SERVICE

LOCATIONS	DEVICES
FLOOR	
48 Plant Her	Strobe Panel Check OK (Key Cabinet Needed)
	— 0 —
47 W. Her.	TTB Data 3-4
	#31A-31B
47 A Telephone Steps	TTB Data 1-2 (Freight) — Strobe Pnl
	#19A-19B Afc 100
	— 0 —
46 B'Cour. (Freight)	Strobe Pnl Afc 100 (1)
	(1) Ext Out to Repair — Key Cabinet Room.
	— 0 —
45 B Conn (Freight)	TTB D3-4 Strobe Pnl
	#30A-30B Pid 2(1)
	TTB D1-2 Afc 100 (1)
	(Wall Closet) Afc 100 (1)
	#18A-18B
45 Freight Accessory	S/D. Replaced Faulty (Previously Reported) Equip. — Back in operation —

PREVENTIVE MAINTENANCE CONTRACT

INVOICE TO: W.T.C

N.Y.C.

SERVICEMAN ASSIGNED: J. Torres / F. Rosario	SEE AT JOB SITE: F.J.)
	DATE SCHEDULED: 6-14-00
CONTRACT #: SFC00818	TYPE OF SYSTEM: 350
FEE SERVICE #	P.O #
CALL AUHTORIZED BY	PHONE / EXT
☑ MAINTENANCE	☐ TEST
☐ JOB COMPLETE	☐ JOB INCOMPLETE
☐ SYSTEM ON LINE	☐ SYSTEM OFF LINE

DEPARTED SHOP	TIME IN	TIME OUT	RETURNED SHOP	TOTAL HOURS
AM / PM	800 AM / PM	430 AM / PM	AM / PM	

MATERIAL RECORD

QUANTITY	DESCRIPTION	COST

CUSTOMER NAME (PRINT): STEINSTEIN

CUSTOMER SIGNATURE

SERVICEMAN SIGNATURE

AUTHORIZATION FOR FIRE ALARM INTERRUPTION
The undersigned has been advised by Fire Service Inc. representative that it may be necessary to interrupt the fire protection service by disconnecting the system and/or a component in the performance of their assigned work.
The undersigned hereby assumes the responsibility for the notification of fire authorities at the time the interruption is initiated and will take all of the precautions deemed necessary during this period of interruption and hold harmless Fire Service Inc. and its employees regarding interruption of fire protection service during their service of the equipment.

NAME DATE TIME

SERVICE PERFORMED & REMAINING: S/Contract. —

As per Contract started Preventive Maint on TTB1 Unit Reset From 48 Fl. to 45 (See List) Above — Also Check Strobes Pull on Floors as Listed. — System Back Restored Back to operation

(A) INACCESSIBLE (B) MISSING (C) DEFECTIVE (D) OTHER

FIRE SERVICE INCORPORATED

22338

Subsidiary of Firecom, Inc.
39-27 Fifty Ninth Street
Woodside, New York 11377
(718) 899-2311

REPORT OF FIELD SERVICE

LOCATIONS	DEVICES
FLOOR	
39	STROBE PNL TRBL - REPAIRS - (2) 12VOLT BATTERIES REPLACED. - AFC 100 CKT CHK O.K. -
31	STROBE PANEL TRBLE - REPAIRS (2) CKTS A-B - DISABLED DUE TO RENOVATION. - TO RESTORE. -
22	STROBE PNL TRBLE - SIGNAL TROUBLE REPAIRS - O.K. -
47	(3) STROBES LIGHTS S.W. CORNER OUTSIDE WIRING CORRECTED ALSO REPAIRED BROKEN P.C. TERMINAL ON STROBE UNIT. CHECK/TEST O.K. -

PREVENTIVE MAINTENANCE CONTRACT

INVOICE TO:
T.W.T.C.
N.Y.C.

SERVICEMAN ASSIGNED: J. TORRES / F. ROSARIO	SEE AT JOB SITE: F.S.I.
	DATE SCHEDULED: 6-13-00
CONTRACT #: S/C N 818	TYPE OF SYSTEM: 8500
FEE SERVICE #	P.O #
CALL AUHTORIZED BY	PHONE / EXT

☒ MAINTENANCE ☒ TEST
☐ JOB COMPLETE ☐ JOB INCOMPLETE
☐ SYSTEM ON LINE ☐ SYSTEM OFF LINE

DEPARTED SHOP	TIME IN	TIME OUT	RETURNED SHOP	TOTAL HOURS
AM PM	8:00 AM PM	4:30 AM PM	AM PM	

AUTHORIZATION FOR FIRE ALARM INTERRUPTION
The undersigned has been advised by Fire Service Inc. representative that it may be necessary to interrupt the fire protection service by disconnecting the system and/or a component in the performance of their assigned work.
The undersigned hereby assumes the responsibility for the notification of the authorities at the time the interruption is initiated and will take all of the precautions deemed necessary during the period of interruption and hold harmless Fire Service Inc. and its employees regarding interruption of the protection service during their service of the equipment.

NAME _____ DATE _____ TIME _____

X

MATERIAL RECORD

QUANTITY	DESCRIPTION	COST
2	BATTERIES 12VLT.	

CUSTOMER NAME (PRINT): SILVERSTEIN
CUSTOMER SIGNATURE:
SERVICEMAN SIGNATURE:

SERVICE PERFORMED & REMAINING: UPON ARRIVAL CHECK TEST REPAIRS ON STROBES UNITS / PANELS AS LISTED ABOVE - 39TH FL. (2) BATTERIES REPLACED ALSO AT P.C. UNIT - ADVISED F.S.I. AS REQUESTED TEST CHECK DOOR RELEASE ON 24TH FL. - SYSTEM OK/RESETED BACK TO OPERATION

(A) INACCESSIBLE (B) MISSING (C) DEFECTIVE (D) OTHER

FIRE SERVICE INCORPORATED

76788

SUBSIDIARY OF FIRECOM INC.
39-27 FIFTY NINTH STREET
WOODSIDE, NEW YORK 11377
(718) 899-2311

REPORT OF FIELD SERVICE

INVOICE TO

SERVICED
7 W.T.C
N.Y.C.

CALL AUTHORIZED BY	CONTRACT #	FEE SERVICE #	FJ #	P.O. #	SEE AT JOB SITE
PT.	S/C00 818				F.S.I

PHONE	EXT	DATE SCHEDULED	TIME SCHEDULED	SERVICEMAN ASSIGNED
		6-7-00		J. FOLEY. F. ROSARIO D. HARRIS

MATERIAL RECORD

QUANTITY ISSUED	QUANTITY B/O	FCI NO	DESCRIPTION	UNIT PRICE	PER	TOTAL AMOUNT
1			HANUAL pll STATION HIRTONE	$40.00		
			— CAT # 47092-0260 —			
			PREVENTIVE MAINTENANCE CONTRACT			

CHECK APPROPRIATE BOX

- ☐ Q.C
- ☐ I & T
- ☐ FEE CALL
- ☐ DELIVERY
- ☐ DEMO
- ☐ EMERGENCY CALL
- ☒ CONTRACT CALL
- ☐ PICK UP
- ☐ DEMO OWNER
- ☐ SURVEY

DEPARTED SHOP	TIME IN	TIME OUT	RETURNED SHOP	TOTAL HOURS	START MILEAGE	END MILEAGE	MISC EXPENSE	CAR FARE
	800	430						

☐ MAT REQD ☐ PARTIAL
☐ OTHER ☐ LABOR REQD

SERVICE DATE 6-7-00

WILL RETURN ON

I & T COMPLETE ☐ CALL COMPLETE ☐

CUSTOMER SIGNATURE

SERVICEMAN SIGNATURE

AUTHORIZATION FOR FIRE ALARM INTERRUPTION

The undersigned has been advised by Fire Service, Inc. representative that it may be necessary to interrupt the fire protection service by disconnecting the system and/or a component in the performance of their assigned work.

The undersigned hereby assumes the responsibility for the notification of the authorities at the time the interruption is initiated and will take all of the precautions deemed necessary during the period of interruption and hold harmless Fire Service Inc. and its employees regarding interruption of fire protection service during their service of the equipment

Date

X

Name

PROBLEM—AS DESCRIBED S/CONTRACT / PREV MAINTENANCE — Mikal Blanding

SERVICE PERFORMED OS PER CONTRACT CHECK / ANY Repairs done on 37TH FL. Warden's Station - Call s/b Replaced - Ang is O.K. — 36TH FR. MANUAL PULL STATION 058 - A' STAIR Replaced Installed new one (old) DEFECTIVE). — CHECK O.K. — 47TH FR ROOF PLANT Replaced Exchanged AFC 100 PANEL STROBE PNL (DEFECTIVE ALONE) Tested Wiring Tested O.K - Back in operation. — STROBE PANEL MODIFICATION UPDATE PERFORM BY Fireway Eng. Dept. — 31ST FL PAGE / SPEAKER TROUBLE Condition due TO OPEN CKT / Faulty. Electrician Forest Dept working on it. — FLOOR Under Construction — Safety / OK / RESET Back to operation /

WORK REMAINING

FCI 155
REV 6186

FIRE SERVICE INCORPORATED 76794

SUBSIDIARY OF FIRE[illegible]OM INC.

39-27 FIFTY NINTH STREET
WOODSIDE, NEW YORK 11377
(718) 899-2311

REPORT OF FIELD SERVICE

INVOICE TO

SERVICED
7 W.T.C.
N.Y.C.

CALL AUTHORIZED BY		CONTRACT #	FEE SERVICE #	F.J #	P.O #	SEE AT JOB SITE
R.T.		S/C 00-818				F.S.D.
PHONE	EXT	DATE SCHEDULED	TIME SCHEDULED			SERVICEMAN ASSIGNED
		6-6-00	A.M. —			J. TORRES F. ROSARIO

MATERIAL RECORD

QUANTITY ISSUED	QUANTITY B/O	F C I NO	DESCRIPTION	UNIT PRICE	PER	TOTAL AMOUNT
			PREVENTIVE MAINTENANCE CONTRACT			

AUTHORIZATION FOR FIRE ALARM INTERRUPTION

The undersigned has been advised by Fire Service, Inc. representative that it may be necessary to interrupt the fire protection service by disconnecting the system and/or a component in the performance of their assigned work.

The undersigned hereby assumes the responsibility for the notification of the authorities at the time the interruption is initiated and will take all of the precautions deemed necessary during the period of interruption and hold harmless Fire Service Inc. and its employees regarding interruption of fire protection service during their service of the equipment.

Date

X

Name

CHECK APPROPRIATE BOX

- ☐ O.C
- ☐ I & T
- ☐ FEE CALL
- ☐ DELIVERY
- ☐ DEMO
- ☐ EMERGENCY CALL
- ☒ CONTRACT CALL
- ☐ PICK UP
- ☐ DEMO OWNER
- ☐ SURVEY

DEPARTED SHOP	TIME IN	TIME OUT	RETURNED SHOP	TOTAL HOURS	START MILEAGE	END MILEAGE	MISC EXPENSE	CAR FARE
	800	430						

☐ MAT RECD ☐ PARTIAL
☐ OTHER ☐ LABOR RECD

SERVICE DATE 6-6-00

WILL RETURN ON

CUSTOMER SIGNATURE

SERVICEMAN SIGNATURE

I & T COMPLETE ☐ CALL COMPLETE ☐

PROBLEM—AS DESCRIBED S/CONTRACT. — MAINTENANCE.

SERVICE PERFORMED (1) PER F.S.D. REQUESTED CHECK DOOR RELEASE ON 24TH FL. FREIGHT DOOR ENTRANCE NORTH (WOOD) - NOT WIRING EXISTING FOR CLASS 'E' FIRE ALARM RELEASE FOR INTERCONNECTION. — AS WELL SOUTH PASS ELEV. LOBBY ENTRANCE SOUTH DOOR (WOOD). — 'A' STAIR EXIT (SOLENOID) DEFECTIVE / SHALL TO BE REPLACED). — (BLD OPERATING). —

(2) ALSO AS PER CONTRACT CHECK STROBE PULLS ON 41ST FL. - 40TH FL. 39TH FL FOR PROPER OPERATION — EVERY O.K. — AS WELL 16TH FL AND 14TH FLOOR. —

(3) REPAIR CHIME ON WARDEN'S PHONE STATION 41ST FL. — CALL S/W KEYBOARD CONNECTIONS CHECK OK

WORK REMAINING (1) 45TH FL. ELEV. S/D 012 ON ALARM CHIME TO 'CUTTING' HOOKING (TILES INSTALLED BY ELEV. FREIGHT LOBBY PAUSING S/D. ACTIVATION / UNIT READING BLD. NOTIFIED / F.S.D. —

FCI 155
REV 6186

FIRE SERVICE INCORPORATED

26065

Subsidiary of Firecom, Inc.
39-27 Fifty Ninth Street
Woodside, New York 11377
(718) 899-2311

REPORT OF FIELD SERVICE

LOCATIONS				DEVICES		
FLOOR				SPK/PAGE	W/STA	SMOKES
32	Solomon Area			✓22	2	22
31	Solomon Area			✓25	2	25
30	Solomon Area			✓27	2	27
29	Solomon Area			✓22	2	22
28	Solomon Area			✓27	2	27
27	Solomon Area			✓29	2	29
26	Solomon Area			✓27	2	27
5	"			✓	5	
* 4	"			✓20	1	19*
* 3	Solomon Area			✓	—	-(2) 9*
2	"			✓	—	4
1	"			✓	—	1
48	ROOF/PLANT			✓	✓	✓
* 47	Solomon Area			✓	✓	✓-(3)*
						66
				STROBES LIGHTS TO BE REPLACED N/S		

PREVENTIVE MAINTENANCE CONTRACT

INVOICE TO: 7 W.T.C
N.Y.C

SERVICEMAN ASSIGNED: A. TORRES / F. ROSARIO	SEE AT JOB SITE: F.S.I
	DATE SCHEDULED: 6-3-00
CONTRACT #: 5/C00 818	TYPE OF SYSTEM: 8300
FEE SERVICE #: -	P.O.#
CALL AUHTORIZED BY	PHONE / EXT
☒ MAINTENANCE	☐ TEST
☐ JOB COMPLETE	☐ JOB INCOMPLETE
☐ SYSTEM ON LINE	☐ SYSTEM OFF LINE

DEPARTED SHOP	TIME IN	TIME OUT	RETURNED SHOP	TOTAL HOURS
AM / PM	8 AM / PM	4:30 AM / PM	AM / PM	

MATERIAL RECORD

QUANTITY	DESCRIPTION	COST
*		

CUSTOMER NAME (PRINT): [illegible]
CUSTOMER SIGNATURE
SERVICEMAN SIGNATURE

AUTHORIZATION FOR FIRE ALARM INTERRUPTION
The undersigned has been advised by Fire Service Inc. representatives that it may be necessary to interrupt the fire protection service by disconnecting the system and/or a component in the performance of their assigned work.
The undersigned hereby assumes the responsibility for the notification of the authorities at the time the interruption is initiated and will take all of the precautions deemed necessary during this period of interruption and hold harmless Fire Service Inc. and its employees regarding interruption of fire protection service during their service of the equipment.

NAME DATE TIME

SERVICE PERFORMED & REMAINING: Typical Contract Annual Preventive Maint Visit For Proper Operation Activation of Speakers Page/Page - Communications Phone + Strobes Lights in Floors Listed Above (Solomon Area). — Also Retested 48th + 47th Floor's Page Speakers / Stations due to previous

(A) INACCESSIBLE (B) MISSING (C) DEFECTIVE (D) OTHER

Malfunctions - NOTE: 47th Floor's 1/2 CKT Active Needs to be Troubleshooted - 3rd Fl. (2) Lights

FIRE SERVICE INCORPORATED 76786

SUBSIDIARY OF FIRECOM INC.

39-27 FIFTY NINTH STREET
WOODSIDE, NEW YORK 11377
(718) 899-2311

REPORT OF FIELD SERVICE

INVOICE TO

SERVICED
-/W.T.C
N.Y.C.

CALL AUTHORIZED BY	CONTRACT #	FEE SERVICE #	FJ #	P O #	SEE AT JOB SITE
C.I.	S/C00818				F.S.I.

PHONE	EXT	DATE SCHEDULED	TIME SCHEDULED	SERVICEMAN ASSIGNED
		5-31-00	A.M.	U. Toner / F. Rosario

MATERIAL RECORD

QUANTITY ISSUED	QUANTITY B/O	F C I NO	DESCRIPTION	UNIT PRICE	PER	TOTAL AMOUNT
			PREVENTIVE MAINTENANCE CONTRACT			

CHECK APPROPRIATE BOX

- ☐ Q.C
- ☐ I & T
- ☐ FEE CALL
- ☐ DELIVERY
- ☐ DEMO
- ☐ EMERGENCY CALL
- ☒ CONTRACT CALL
- ☐ PICK UP
- ☐ DEMO OWNER
- ☐ SURVEY

DEPARTED SHOP	TIME IN	TIME OUT	RETURNED SHOP	TOTAL HOURS	START MILEAGE	END MILEAGE	MISC EXPENSE	CAR FARE
	800	430						

- ☐ MAT REQD ☐ PARTIAL
- ☐ OTHER ☐ LABOR REQD

SERVICE DATE: 5-31-00

WILL RETURN ON:

I & T COMPLETE ☐ CALL COMPLETE ☐

CUSTOMER SIGNATURE

SERVICEMAN SIGNATURE

AUTHORIZATION FOR FIRE ALARM INTERRUPTION

The undersigned has been advised by Fire Service, Inc. representative that it may be necessary to interrupt the fire protection service by disconnecting the system and/or a component in the performance of their assigned work.

The undersigned hereby assumes the responsibility for the notification of the authorities at the time the interruption is initiated and will take all of the precautions deemed necessary during the period of interruption and hold harmless Fire Service Inc. and its employees regarding interruption of fire protection service during their service of the equipment.

Name

Date

PROBLEM—AS DESCRIBED SERVICE CONTRACT / PREV. MAINTENANCE / 2 QTRS. —

SERVICE PERFORMED 14TH FL. STROBE PANEL Trouble 'A' CKT. - Three Four Unit STROBE Light OPEN WIRING North Corridor. - Repaired / Tested Back to NORMAL. - 16TH FL. STROBE PANEL (HER) Repaired. - P.C. - Modified UPDATED - due to FALSE Trouble Intermittent. - 'A' & 'B' CKT'S Restored Back to NORMAL. - TEST O.K. - 41ST FL. STROBE PANEL PAD-2 Trouble due to BATTERY discharge / TO BE Replaced For Specific ALSO AS per F.S.I. Request Check For DOOR Release ACTIVATION on Second Location at 3RD / 14TH / 27TH / 29 O.K. —

WORK REMAINING 41ST STROBE PANEL Replace BATTERIES. —

FCI 155
REV 6186

FIRE SERVICE INCORPORATED 76787

SUBSIDIARY OF FIRECOM INC.
39-27 FIFTY NINTH STREET
WOODSIDE, NEW YORK 11377
(718) 899-2311

REPORT OF FIELD SERVICE

INVOICE TO

SERVICED

7 W.T.C

N.Y.C.

CALL AUTHORIZED BY		CONTRACT #	FEE SERVICE #	FJ #	P O #	SEE AT JOB SITE
R.J.		S/C 000 818				F.J.O.
PHONE	**EXT**	**DATE SCHEDULED**	**TIME SCHEDULED**			**SERVICEMAN ASSIGNED**
		5-30-00	AM			J. Torres / F. Rosario

MATERIAL RECORD

QUANTITY ISSUED	QUANTITY B/O	F C I NO	DESCRIPTION	UNIT PRICE	PER	TOTAL AMOUNT
			PREVENTIVE MAINTENANCE CONTRACT			

CHECK APPROPRIATE BOX

- ☐ Q.C
- ☐ I & T
- ☐ FEE CALL
- ☐ DELIVERY
- ☐ DEMO
- ☐ EMERGENCY CALL
- ☒ CONTRACT CALL
- ☐ PICK UP
- ☐ DEMO OWNER
- ☐ SURVEY

DEPARTED SHOP	TIME IN	TIME OUT	RETURNED SHOP	TOTAL HOURS	START MILEAGE	END MILEAGE	MISC EXPENSE	CAR FARE
	800	4:30						

☐ MAT REQD ☐ PARTIAL
☐ OTHER ☐ LABOR REQD

SERVICE DATE 5-30-00

WILL RETURN ON

I & T COMPLETE ☐ CALL COMPLETE ☐

CUSTOMER SIGNATURE

SERVICEMAN SIGNATURE

AUTHORIZATION FOR FIRE ALARM INTERRUPTION

The undersigned has been advised by Fire Service, Inc. representative that it may be necessary to interrupt the fire protection service by disconnecting the system and/or a component in the performance of their assigned work.

The undersigned hereby assumes the responsibility for the notification of the authorities at the time the interruption is initiated and will take all of the precautions deemed necessary during the period of interruption and hold harmless Fire Service Inc. and its employee regarding interruption of fire protection service during their service of the equipment.

Date

X

Name

PROBLEM—AS DESCRIBED S/CONTRACT REPAIRS. — PREV. MAINTENANCE. —

SERVICE PERFORMED 45TH FL. STROBE PKL ~~FEED~~ ~~FEED~~ FOUND B LOOP - SHORTED TO AFC 100 DE TRACED STROBES LIGHTS / ZONE BYPASSED E.O.L. - TEMPORARILY. — H/A ACCS. - 41ST FL. REPLACED INSTALLED (2) NEW 12 VOLTS. BATTERIES PAID 21 PANELS (OK) thru A DRY OUT). — TROUBLE/ALARM BACK TO NORMAL. —
47TH FL. CHECK TTB'S DATE — FOR W/STATIONS & FLOOR PAGE INOPERABLE. — REPLACED Mother Board / 792 P.C. — FOR OUTPUTS W/HARNESS. — WARDEN'S STATION REPLACED CHECK O.K. — FLOOR PAGE CHECK O.K. —
48TH FL. ROOF PLANT REPAIRED W/STATIONS / P.A. PAGE. CHECK/TEST O.K. —

WORK REMAINING CONTINUE I/C. REPAIRS. —

FCI 155
REV 6198

FIRE SERVICE INCORPORATED

22337

Subsidiary of Firecom, Inc.
39-27 Fifty Ninth Street
Woodside, New York 11377
(718) 899-2311

REPORT OF FIELD SERVICE

LOCATIONS			DEVICES			
FLOOR			TYPE		RESET	CHK
47	'B' Riser		155		OK	✓
46			154		OK	✓
45			147		closed	✓
44	'B' Riser		146		OK	✓
44			146		OK	✓
44			142		OK	✓
43			140		closed	✓
42	'B' Riser		139		closed	✓
41			138		OK	✓
40			137		OK	✓
39			136		OK	✓
38			135		OK	✓
37			134		OK	✓
36			133		OK	✓
35	'B' Riser		132		OK	✓
34			131		OK	✓
33			130		OK	✓
32			129		closed	✓
31			128		closed	✓
30			127		closed	✓
29	B Riser		126		OK	✓
28			125		OK	✓
27			124		OK	✓
26			123		OK	✓
7			130		OK	✓
6			129		OK	✓
5			128		OK	✓
3	'B' Riser		126		OK	✓
3			125		OK	✓
2			123		OK	✓
2			123		OK	✓
1			123		OK	✓

INVOICE TO: W.T.C

N.Y.C.

SERVICEMAN ASSIGNED: J. Torres / F. Rosario	SEE AT JOB SITE: F-J-1
	DATE SCHEDULED: 5-24-00
CONTRACT #: 5/C00 818	TYPE OF SYSTEM: 850
FEE SERVICE #	P.O. #
CALL AUHTORIZED BY	PHONE / EXT
☒ MAINTENANCE	☒ TEST
☐ JOB COMPLETE	☐ JOB INCOMPLETE
☐ SYSTEM ON LINE	☐ SYSTEM OFF LINE

DEPARTED SHOP	TIME IN	TIME OUT	RETURNED SHOP	TOTAL HOURS
AM PM	8:30 AM PM	9:30 AM PM	AM PM	

MATERIAL RECORD

QUANTITY	DESCRIPTION	COST
	PREVENTIVE MAINTENANCE CONTRACT	

CUSTOMER NAME (PRINT): SILVERSTEIN

CUSTOMER SIGNATURE:

SERVICEMAN SIGNATURE: Frank Rosario

AUTHORIZATION FOR FIRE ALARM INTERRUPTION
The undersigned has been advised by Fire Service Inc. representatives that it may be necessary to interrupt the fire protection service by disconnecting the system and/or a component in the performance of their assigned work.
The undersigned hereby assumes the responsibility for the notification of the authorities at the time the interruption is initiated and will take all of the precautions deemed necessary during the period of interruption and hold harmless Fire Service Inc. and its employees regarding interruption of fire protection service during their service of the equipment.

TIME

DATE

NAME

SERVICE PERFORMED & REMAINING

Q.S. for F.J.1 Request / Blg Reset & Check Resets on Tapers

S/W on 'B' Riser As Listed - (Plan out Pressures) -

System Ck / Inspected as Required -

(A) INACCESSIBLE (B) MISSING (C) DEFECTIVE (D) OTHER

FIRE SERVICE INCORPORATED

22336

Subsidiary of Firecom, Inc.
39-27 Fifty Ninth Street
Woodside, New York 11377
(718) 899-2311

REPORT OF FIELD SERVICE

LOCATIONS | **DEVICES**

INVOICE TO: W.T.C
N.Y.C.

FLOOR	'B' Riser		THPR		RESET	CHK
25			122		OK	✓
24			121		OK	✓
23			120		OK	✓
22			150		OK	✓
21	'B' Riser		149		OK	✓
21	(BEMD)		149		OK	✓
20			146		OK	✓
20			145		OK	✓
20			144		OK	✓
20			143		OK	✓
19			142		OK	✓
			(ADJD)			
18	'B' Riser		141		OK	✓
17			140		O.K	✓
16			139		OK	✓
15			138		OK	✓
14			137		OK	✓
			(ADJD)			
13	'B' Riser		136		OK	✓
12			135		OK	✓
11			134		OK	✓
10			133		OK	✓
9	'B' Riser		132		OK	✓
8			131		O.K	✓
39	STROBE PNL (UPDATED/MODIFIED) AFL 100				OK	
	Back in operation.					

SERVICEMAN ASSIGNED: J. Torres / T. Doiron

SEE AT JOB SITE: F.S.I.

DATE SCHEDULED: 5-23-00

CONTRACT #: S/C 00818

TYPE OF SYSTEM: 8 V 00

FEE SERVICE #:

P.O. #:

CALL AUHTORIZED BY | PHONE | EXT

☐ MAINTENANCE ☐ TEST

☐ JOB COMPLETE ☐ JOB INCOMPLETE

☐ SYSTEM ON LINE ☐ SYSTEM OFF LINE

DEPARTED SHOP	TIME IN	TIME OUT	RETURNED SHOP	TOTAL HOURS
AM PM	800 AM PM	430 AM PM	AM PM	

MATERIAL RECORD

QUANTITY	DESCRIPTION	COST
	PREVENTIVE MAINTENANCE CONTRACT	

CUSTOMER NAME (PRINT): Sean O'Keefe.

CUSTOMER SIGNATURE

SERVICEMAN SIGNATURE: David Lopes

AUTHORIZATION FOR FIRE ALARM INTERRUPTION
The undersigned has been advised by Fire Service Inc. representative that it may be necessary to interrupt the fire protection service by disconnecting the system and/or a component in the performance of their assigned work.
The undersigned hereby assumes the responsibility for the notification of the authorities at the time the interruption is initiated and will take all of the precautions deemed necessary during this period of interruption and hold harmless Fire Service Inc. and its employees regarding interruption of fire protection service during their service of the equipment.

NAME DATE TIME

SERVICE PERFORMED & REMAINING

As per F.S.I. Requested - as per Preventive Maintenance Check for Alarm / Sky Reset Door Floor / Tamper S/s on Standpipe 'B' Riser (List Printout Reports). Also: Removed Strobe PNL 39th Fl (Modification Updates) Check ok. Back in operation

(A) INACCESSIBLE (B) MISSING (C) DEFECTIVE (D) OTHER

FIRE SERVICE INCORPORATED

22334

Subsidiary of Firecom, Inc.
39-27 Fifty Ninth Street
Woodside, New York 11377
(718) 899-2311

REPORT OF FIELD SERVICE

LOCATIONS		DEVICES			
FLOOR	Area 48	W/STA	SH/STD		P.A.
38	Solomon Both	2	18		OK
37	Solomon Smith	2	21		OK
36	Solomon Smith A' B' EXIT SIGN	2	22		OK
	MANUAL PULL STA to Replace. -				
35	Solomon Smith B.	2	14		O.K
34	Solomon Smith B.	21	20		OK
33	Solomon Smith B.	21	23		OK.
	(1) S/SMOKE UNIT (LIGHT N/G TO Replace	FRONT OF W. HALL -			

INVOICE TO:
TWTC
Solomon Smith Barney
N.Y.C.

SERVICEMAN ASSIGNED: J. Torres / E. Rosario	SEE AT JOB SITE: T. & D
	DATE SCHEDULED: 5-20-00
CONTRACT #: s/c 00 818	TYPE OF SYSTEM: 8500
FEE SERVICE #	P.O #
CALL AUHTORIZED BY	PHONE / EXT
☐ MAINTENANCE	☐ TEST
☐ JOB COMPLETE	☐ JOB INCOMPLETE
☐ SYSTEM ON LINE	☐ SYSTEM OFF LINE

DEPARTED SHOP	TIME IN	TIME OUT	RETURNED SHOP	TOTAL HOURS
AM PM	11:10 AM PM	4:20 AM PM	AM PM	

AUTHORIZATION FOR FIRE ALARM INTERRUPTION
The undersigned has been advised by Fire Service Inc. representative that it may be necessary to interrupt the fire protection service by disconnecting the system and/or a component in the performance of their assigned work.
The undersigned hereby assumes the responsibility for the notification of the authorities at the time the interruption is initiated and will take all of the precautions deemed necessary during the period of interruption and hold harmless Fire Service Inc. and its employees regarding interruption of fire protection service during their service of the equipment.

NAME / DATE / TIME

MATERIAL RECORD

QUANTITY	DESCRIPTION	COST

PREVENTIVE MAINTENANCE CONTRACT

CUSTOMER NAME (PRINT)
CUSTOMER SIGNATURE
SERVICEMAN SIGNATURE

SERVICE PERFORMED & REMAINING: As per Contract. Carried Testing & Inspection of Audio Page Speakers, Fire Strobe Lights on Solomon Smith Barney Floors as Listed. 8 Sound. — Communications Warden's Phone Stations. — Units Available For Test. —

(A) INACCESSIBLE (B) MISSING (C) DEFECTIVE (D) OTHER

FIRE SERVICE INCORPORATED

22333

Subsidiary of Firecom, Inc.
39-27 Fifty Ninth Street
Woodside, New York 11377
(718) 899-2311

REPORT OF FIELD SERVICE

LOCATIONS | **DEVICES**

FLOOR				CABLE	ADDR	S/D	TEST/CLEAN
3rd	ELECT	A		1	166	BLK	
	ELECT	B		1	166	D13	
	TELEP	B		1	166	BLK	
	COMM	A		1	166	BLK	
	COMM	B		1	166	BLK	
	FIELD	ELEV		01	002	BLK	
	[illegible]						
	SECURITY	CLOSET		3	048	IEL3	
	KITCHEN	SUPPLY		3	042	EDWDS	✓
	WEST	MEN	AREA	3	006	PEC3T	✓
	WEST	MEN	AREA	3	006	PEC3T	✓
	WEST	MEN	D/D	3	040	EDWDS	✓
	WEST	MEN	D/D	3	041	EDWDS	✓
	WEST	MEN	D/D SUPPLY	3	040	EDWDS	✓
	WEST	MEN	D/D RET.	3	040	EDWDS	✓
3rd	RECEPTION	AREA		1	077	D13	✓
	AREA	S/D		1	077	D13	✓
	ELEV.	S/D	LOBBY	3	029	PEC3	✓
2nd	E.H.R.			3	005	PEC3T	✓
2nd	ELEV.	LOBBY		3	028	PEC3	✓
1st	M.ER.	D/D		3	039	EDWDS	✓
1	MEN	AREA		1	012	PEC3T	✓
1	MEN	D/D		3	037	EDWDS	✓

PREVENTIVE MAINTENANCE CONTRACT

INVOICE TO: 7W.T.C.
N.Y.C.

SERVICEMAN ASSIGNED: J. TORRES / F. ROSARIO	SEE AT JOB SITE: F.J.D
CONTRACT #: SC 00 818	DATE SCHEDULED: 5-17-00
FEE SERVICE #	TYPE OF SYSTEM: 8 ST
CALL AUHTORIZED BY	P.O. #
PHONE	EXT

☒ MAINTENANCE ☒ TEST
☐ JOB COMPLETE ☐ JOB INCOMPLETE
☐ SYSTEM ON LINE ☐ SYSTEM OFF LINE

DEPARTED SHOP	TIME IN	TIME OUT	RETURNED SHOP	TOTAL HOURS
AM PM	8:10 AM PM	4:30 AM PM	AM PM	

MATERIAL RECORD

QUANTITY	DESCRIPTION	COST

CUSTOMER NAME (PRINT): SILVERSTEIN
CUSTOMER SIGNATURE: [signature]
SERVICEMAN SIGNATURE: [signature]

AUTHORIZATION FOR FIRE ALARM INTERRUPTION
The undersigned has been advised by Fire Service Inc. representative that it may be necessary to interrupt the fire protection service by disconnecting the system and/or a component in the performance of their assigned work.
The undersigned hereby assumes the responsibility for the notification of the authorities at the time the interruption is initiated and will take all of the precautions deemed necessary during this period of interruption and hold harmless Fire Service Inc. and its employees regarding interruption of the protection service during this service of the equipment.

NAME _____ DATE _____ TIME _____

SERVICE PERFORMED & REMAINING: 5/ CONTRACT CONTINUE / PREV. MAINTENANCE ON SMOKE DETECTORS UNITS FLOORS 3rd / 2nd / 1st AS LISTED ABOVE (SILVERSTEIN SMITH BOROS ONLY. — SYSTEM OK / SERVICE COMPLETED / RETURNED TO OPERATION

(A) INACCESSIBLE (B) MISSING (C) DEFECTIVE (D) OTHER

FIRE SERVICE INCORPORATED

22332

Subsidiary of Firecom, Inc.
39-27 Fifty Ninth Street
Woodside, New York 11377
(718) 899-2311

REPORT OF FIELD SERVICE

LOCATIONS | **DEVICES**

FLOOR	AREA/ZONE		CABLE	XMTR	S/D	TST/CLEAN
5	ELEC	A	1	169	BLK	✓
	ELEC	B	1	169	BLK	✓
	ELEC	C	1	169	BLK	✓
	ELEC	F	1	169	BLK	✓
	TELEPH	A	1	169	BLK	✓
	TELEPH	B	1	169	BLK	✓
	COMM	B	1	169	BLK	✓
	FREIGHT	ELEV	1	004	BLK	✓
	MAIN PASS	ELEV	1	004	BLK	✓
	ROTO	CLOSE	3	013	PEC3T	✓
5	ROTO	CLOSE	3	013	PEC3T	✓
4	ELECT	A	1	167	BLK	✓
	ELECT	G	3	050	PEC3	✓
	TELEPH	B	1	167	BLK	✓
	COMM	B	1	167	BLK	✓
	FREIGHT	ELEV.	1	003	BLK	✓
	PASS	ELEV.	1	003	BLK	✓
	CHEF OFFICE		3	043	EQUIS	✓
	ELECT	B	1	167	BLK	✓
4	TELEPH	A	1	167	BLK	✓
44	STAIRE	ELEV	4	018	PEC3	*
	MULTIPLE	ALARMS (SEE NOTE)	UNIT	REPORT		
	BACK IN	OPERATION. -				

PREVENTIVE MAINTENANCE CONTRACT

INVOICE TO: TWTC

N.Y.C.

SERVICEMAN ASSIGNED: J. TORRES / F. ROSARIO	SEE AT JOB SITE: FJ
	DATE SCHEDULED: 5/16-00
CONTRACT #: SE 00818	TYPE OF SYSTEM: 8500
FEE SERVICE #	P.O. #
CALL AUHTORIZED BY	PHONE / EXT

☒ MAINTENANCE ☐ TEST

☐ JOB COMPLETE ☐ JOB INCOMPLETE

☐ SYSTEM ON LINE ☐ SYSTEM OFF LINE

DEPARTED SHOP	TIME IN	TIME OUT	RETURNED SHOP	TOTAL HOURS
AM / PM	800 AM / PM	430 AM / PM	AM / PM	

MATERIAL RECORD

QUANTITY	DESCRIPTION	COST

CUSTOMER NAME (PRINT): SILVERSTEIN

CUSTOMER SIGNATURE

SERVICEMAN SIGNATURE

AUTHORIZATION FOR FIRE ALARM INTERRUPTION
The undersigned has been advised by Fire Service Inc representative that it may be necessary to interrupt the fire protection service by disconnecting the system and/or a component in the performance of their assigned work.
The undersigned hereby assumes the responsibility for the notification of the authorities at the time the interruption is initiated and will take all of the precautions deemed necessary during the period of interruption and hold harmless Fire Service Inc. and its employees regarding interruption of fire protection service during their service of the equipment.

NAME / DATE / TIME

SERVICE PERFORMED & REMAINING: S/Contract -

Preventive Maintenance on Smoke Detection on 5th & 4th. (Solarium floor) as listen also Report on 4th Smoke Detection Unit (4-018) Elect. Shaft Alarming Unit Reset (Testing) for Auto Testing Unit back in Operation

(A) INACCESSIBLE (B) MISSING (C) DEFECTIVE (D) OTHER

FIRE SERVICE INCORPORATED

91421
#1

SUBSIDIARY OF FIRECOM INC.
39-27 FIFTY NINTH STREET
WOODSIDE, NEW YORK 11377
(718) 899-2311

REPORT OF FIELD SERVICE

INVOICE TO

SERVICED
7WTC New York
N.Y

CALL AUTHORIZED BY	CONTRACT #	FEE SERVICE #	FJ #	PO #	SEE AT JOB SITE
SHOP	U.P.S = 818				F.S.I

PHONE	EXT	DATE SCHEDULED	TIME SCHEDULED	SERVICEMAN ASSIGNED
		5-16-00	AM	C. FORERO

MATERIAL RECORD

QUANTITY ISSUED	QUANTITY B/O	FCI NO	DESCRIPTION	UNIT PRICE	PER	TOTAL AMOUNT
			PREVENTIVE MAINTENANCE CONTRACT			

AUTHORIZATION FOR FIRE ALARM INTERRUPTION

The undersigned has been advised by Fire Service Inc representative that it may be necessary to interrupt the fire protection service by disconnecting the system and/or a component in the performance of their assigned work.

The undersigned hereby assumes the responsibility for the notification of the authorities at the time the interruption is initiated and will take all of the precautions deemed necessary during the period of interruption and hold harmless Fire Service Inc and its employees regarding interruption of the protection service during their service of the equipment.

Date

X

Name

CHECK APPROPRIATE BOX

- ☐ Q.C
- ☐ I&T
- ☐ FEE CALL
- ☐ DELIVERY
- ☐ DEMO
- ☐ EMERGENCY CALL
- ☒ CONTRACT CALL
- ☐ PICK UP
- ☐ DEMO OWNER
- ☐ SURVEY

DEPARTED SHOP	TIME IN	TIME OUT	RETURNED SHOP	TOTAL HOURS	START MILEAGE	END MILEAGE	MISC EXPENSE	CAR FARE
	9.30	11.30						
	AM	PM						

- ☐ MAT REQD
- ☐ PARTIAL
- ☐ OTHER
- ☐ LABOR REQD

I&T COMPLETE ☐ CALL COMPLETE ☐

SERVICE DATE: 5-16-00

WILL RETURN ON:

CUSTOMER SIGNATURE: Sean O'Keeffe

SERVICEMAN SIGNATURE: CARLOS FORERO

PROBLEM—AS DESCRIBED: U.P.S MAINTENANCE / SERVICE CONTRACT

SERVICE PERFORMED: Checked U.P.S System, Took Reading For INPUTS - OUTPUTS, Battery Voltage, U.P.S System Cont) Also Cleaned Filters

Battery Amp .2
Total Battery Voltage = 140.7 V (#80 Batteries)
Out - Put Hz 62.5 Hz
Load #1 11.1
L #2 11.1
Output Voltage 296.V A/C

WORK REMAINING

FCI 155
REV 6186

FIRE SERVICE INCORPORATED

91680

SUBSIDIARY OF FIRECOM INC.

39-27 FIFTY NINTH STREET
WOODSIDE, NEW YORK 11377
(718) 899-2311

REPORT OF FIELD SERVICE

INVOICE TO

SERVICED

7 WTC
New York City

CALL AUTHORIZED BY	CONTRACT #	FEE SERVICE #	F.I.#	P.O. #	SEE AT JOB SITE
Ricky Trivino	UPS SC 818				F.S.D

PHONE	EXT	DATE SCHEDULED	TIME SCHEDULED	SERVICEMAN ASSIGNED
		05/16/00		MARIO D

MATERIAL RECORD

QUANTITY ISSUED	QUANTITY B/O	F.C.I. NO.	DESCRIPTION	UNIT PRICE	PER	TOTAL AMOUNT
			PREVENTIVE MAINTENANCE CONTRACT			

CHECK APPROPRIATE BOX

- ☐ Q.C
- ☐ I & T
- ☐ FEE CALL
- ☐ DELIVERY
- ☐ DEMO
- ☐ EMERGENCY CALL
- ☐ CONTRACT CALL
- ☐ PICK UP
- ☐ DEMO OWNER
- ☐ SURVEY

DEPARTED SHOP	TIME IN	TIME OUT	RETURNED SHOP	TOTAL HOURS	START MILEAGE	END MILEAGE	MISC EXPENSE	CAR FARE
8:00 AM	9:30 AM	11:30 AM						

- ☐ MAT RECD
- ☐ PARTIAL
- ☐ OTHER
- ☐ LABOR RECD

SERVICE DATE

CUSTOMER SIGNATURE: Sean O'Keeffe

I & T COMPLETE ☐ CALL COMPLETE ☐

WILL RETURN ON

SERVICEMAN SIGNATURE: Mario Navarro

AUTHORIZATION FOR FIRE ALARM INTERRUPTION

The undersigned has been advised by Fire Service, Inc. representative that it may be necessary to interrupt the fire protection service by disconnecting the system and/or a component in the performance of their assigned work.

The undersigned hereby assumes the responsibility for the notification of the authorities at the time the interruption is initiated and will take all of the precautions deemed necessary during the period of interruption and hold harmless Fire Service Inc. and its employees regarding interruption of fire protection service during their service of the equipment.

Date

X

Name

PROBLEM—AS DESCRIBED

UPS Maintenance / Service contract

SERVICE PERFORMED

Cleaned and checked UPS system for connections, input and output voltages readings and Battery voltages. Battery voltage range is 13.5 Vdc (normal range)

Battery amp : 0.2 Amps
total battery voltage 140 Vdc
output Hz : 62.5 Hz

WORK REMAINING

Load 1 : 11.0 Amps
Load 2 : 11.0 Amps
output voltage 246 V AC

FCI 155
REV 6186

FIRE SERVICE INCORPORATED

22330

Subsidiary of Firecom, Inc.
39-27 Fifty Ninth Street
Woodside, New York 11377
(718) 899-2311

REPORT OF FIELD SERVICE

LOCATIONS				DEVICES			
FLOOR				W/STA	SP/STRBS		P.A.
48	Solomon Smith B.			2	6		N/G.
47	〃	〃		2	17		N/G.
46	〃	〃		2	23		O.K.
45	〃	〃		1	54		O.K
44	〃	〃	〃	1	16		O.K
43	〃	〃		1	OUT (UNDER CONST)		OUT
42	〃	〃		2	20		O.K
41	〃	〃		2	23		O.K.
40	〃	〃		2	22		O.K
39	〃	〃		2	24		O.K.

TO BE CONTINUE

PREVENTIVE MAINTENANCE CONTRACT

INVOICE TO: T.W.T.C. SOLOMON SMITH BARNEY N.Y.C.

SERVICEMAN ASSIGNED: Q. TORRES / F. ROSARIO	SEE AT JOB SITE: F.J.
	DATE SCHEDULED: 5-13-00
CONTRACT #: S/C 00818	TYPE OF SYSTEM: 8500
FEE SERVICE #	P.O. #: -
CALL AUHTORIZED BY	PHONE / EXT

☐ MAINTENANCE ☐ TEST
☐ JOB COMPLETE ☐ JOB INCOMPLETE
☐ SYSTEM ON LINE ☐ SYSTEM OFF LINE

DEPARTED SHOP	TIME IN	TIME OUT	RETURNED SHOP	TOTAL HOURS
AM PM	800 AM PM	430 AM PM	AM PM	

MATERIAL RECORD

QUANTITY	DESCRIPTION	COST

CUSTOMER NAME (PRINT): LOUIS MAZZONE
CUSTOMER SIGNATURE: Louis Mazzone
SERVICEMAN SIGNATURE: Q. Torres / F. Rosario

AUTHORIZATION FOR FIRE ALARM INTERRUPTION
The undersigned has been advised by Fire Service Inc. representative that it may be necessary to interrupt the fire protection service by disconnecting the system and/or a component in the performance of their assigned work
The undersigned hereby assumes the responsibility for the notification of the time the interruption is initiated and will take all of the precautions deemed necessary during this period of interruption and hold harmless Fire Service Inc. and its employees regarding interruption of fire protection service during their service of the equipment.

NAME _____ DATE _____ TIME _____

SERVICE PERFORMED & REMAINING: S/CONTRACT - CHECK TESTED AUDIO/VISUAL ACTIVATION ON SPEAKER'S / STROBES LIGHTS BY ALARMING 4/STATIONS ON FLOOR'S 48 TO 39 AS LISTED. I ALSO TESTED COMMUNICATION DEVICES - WARDEN'S PHONES. -

NOTE: SPKR'S / STROBE FLOOR'S 48 (PART + 47 FL) DEFECTIVE N/G - TO BE

(A) INACCESSIBLE (B) MISSING (C) DEFECTIVE (D) OTHER

(D) N/G - TROUBLESHOOTED - REPAIR AUDIO PAGE CKT'S. -

FIRE SERVICE INCORPORATED

21309

Subsidiary of Firecom, Inc.
39-27 Fifty Ninth Street
Woodside, New York 11377
(718) 899-2311

REPORT OF FIELD SERVICE

LOCATIONS | **DEVICES**

FLOOR	AREA	LOCATION		CAP'Y	MANUF.	S/D	TST & CLEAN
35	ELECT	A - B	(2)	2	196	BLK	✓
	TELEPH	A - B	(2)	2	196	BLK	✓
	COMM	A - B	(2)	2	196	BLK	✓
	ELECT	C - D	(2)	4	049	EDWARDS	✓
	ELECT	F		4	049	BLK	✓
	ELECT	F1		4	049	PEC 3	✓
	ELECT	G		4	073	PEC 3	✓
	SECURITY			4	073	PEC 3	✓
	ELEV. PASS			2	012	BLK	✓
	FREIGHT ELEV			2	012	BLK	✓
	ELEV. SHUTTLE			4	001	PEC 3	✓
	W. MEN AREA			4	025	PEC 3T	✓
	W. MEN D/D.			4	097	EDWARDS	✓
34	ELECT	A - B	(2)	2	194	BLK	✓
	ELECT	C - D	(2)	2	193	BLK	✓
	TELEPH	A - B	(2)	2	194	BLK	✓
	TELEPH	C - D	(2)	2	193	BLK	✓
	COMM	A - B	(2)	2	194	BLK	✓
	COMM	C		2	193	BLK	✓
	ELECT	DW		2	193	BLK	✓
	ELECT	F		4	048	PEC 3	✓
	ELECT #1	A/I ROOM		4	048	PEC 3	✓
	ELECT	G		4	072	PEC 3	✓
	SECURITY			4	072	PEC 3	✓
	FREIGHT ELEV			2	011	BLK	✓
	ELEV. LOBBY			2	011	BLK	✓
	ELEV. SHUTTLE			4	000	PEC 3	✓
	CORE MEN	AREA	(3)	91	252	PEC 3T	✓
	CORE MEN D/D.			2	251	HONEYWELL	✓
	CORE MEN D/D.			2	251	HONEYWELL	✓
	W. MEN	AREA		4	024	PEC 3T	✓
	W. MEN D/D			4	096	EDWARDS	✓
	KITCHEN	EXH.		4	121	EDWARDS	✓

INVOICE TO:
W.T.C
N.Y.C

SERVICEMAN ASSIGNED: J. TORRE / F. ROSARIO	SEE AT JOB SITE: F.S.I.
	DATE SCHEDULED: 4-19-00
CONTRACT #: 5/200 818	TYPE OF SYSTEM: 8500
FEE SERVICE #	P.O. #
CALL AUTHORIZED BY	PHONE / EXT

☑ MAINTENANCE ☐ TEST
☑ JOB COMPLETE ☐ JOB INCOMPLETE
☐ SYSTEM ON LINE ☐ SYSTEM OFF LINE

DEPARTED SHOP	TIME IN	TIME OUT	RETURNED SHOP	TOTAL HOURS
AM / PM	800 AM / PM	430 AM / PM	AM / PM	

MATERIAL RECORD

QUANTITY	DESCRIPTION	COST
	PREVENTIVE MAINTENANCE CONTRACT	

CUSTOMER NAME (PRINT): SILVERSTEIN
CUSTOMER SIGNATURE:
SERVICEMAN SIGNATURE: J. Torre - Frank Rosario

AUTHORIZATION FOR FIRE ALARM INTERRUPTION
The undersigned has been advised by Fire Service Inc. representative that it may be necessary to interrupt the fire protection service by disconnecting the system and/or a component in the performance of their assigned work.
The undersigned hereby assumes the responsibility for the notification of the authorities at the time the interruption is initiated and will take all of the precautions deemed necessary during this period of interruption and hold harmless Fire Service Inc. and its employees regarding interruption of the protection service during their service of the equipment.

NAME DATE TIME

SERVICE PERFORMED & REMAINING

S/Contract. Routine Preventive Maintenance Smoke Detectors on Floors 35th/34th Solenoid - / Areas Listed - / System Ok / Reset - / Lookout Checked D.R. / Signals / Page O.K. -

(A) INACCESSIBLE (B) MISSING (C) DEFECTIVE (D) OTHER

FIRE SERVICE INCORPORATED

21311

Subsidiary of Firecom, Inc.
39-27 Fifty Ninth Street
Woodside, New York 11377
(718) 899-2311

REPORT OF FIELD SERVICE

LOCATIONS | **DEVICES**

INVOICE TO: TWTC / N.Y.C.

FLOOR				CABLE	XMTR/#	S/A	TEST
33	ELECT	A-B	(2)	2	191	BLK	✓
	TELEPH	A-B	(2)	2	191	BLK	✓
	COMM	A-B	(2)	2	191	BLK	✓
	ELECT	C-D	(2)	2	192	BLK	✓
	TELEPH	C-D	(2)	2	192	BLK	✓
	COMM	C		2	192	BLK	✓
	ELECT	D.W.		2	192	BLK	✓
	ELECT	F		2	018	PEC3	✓
	ELEC 'G' CLOSET			3	011	PEC3	✓
	SECURITY CLOSET			3	011	PEC3	✓
	ELEV LOBBY	PASS		2	010	BLK	✓
	FREIGHT LOBBY ELEV			2	010	BLK	✓
	SHUTTLE ELEV.			3	027	PEC3	✓
	CORE HDR	AREA	(3)	2	250	PEC3T	✓
	CORE HDR D/D		(2)	2	249	HOCHKI	✓
	W. HDR. AREA		(2)	3	004	PEC3T	✓
	W. HDR D/D		(2)	3	036	EDWDS	✓
32	PASS ELEV.			2	009	BLK	✓
	FREIGHT ELEV.			2	009	BLK	✓
	ELECT	A-B	(2)	2	190	BLK	✓
	TELEPH	A-B	(2)	2	190	BLK	✓
	COMM	A-B	(2)	2	190	BLK	✓
	ELECT	C-D	(2)	2	189	BLK	✓
	TELEPH	C-D	(2)	2	189	BLK	✓
	COMM	C		2	189	BLK	✓
	ELECT	D.W.		2	189	BLK	✓
	ELECT	F		3	017	PEC3	✓
	ELEC G / SEC.		(2)	3	010	PEC3	✓
	SHUTTLE ELEV.			3	026	PEC3	✓
	CORE HDR AREA		(3)	2	248	PEC3T	✓
	CORE HDR D/D		(2)	2	247	HOCHKI	✓
	W. HDR AREA		(2)	3	003	PEC3T	✓
	W. HDR D/D		(2)	3	035	EDWDS	✓

SERVICEMAN ASSIGNED: L. TORNER / F. ROSARIO

SEE AT JOB SITE: F.S.I.

DATE SCHEDULED: 4-25-00

CONTRACT #: S/00 818

TYPE OF SYSTEM: 8V00

FEE SERVICE #:

P.O. #:

CALL AUHTORIZED BY | PHONE | EXT

☒ MAINTENANCE ☒ TEST

☐ JOB COMPLETE ☐ JOB INCOMPLETE

☐ SYSTEM ON LINE ☐ SYSTEM OFF LINE

DEPARTED SHOP	TIME IN	TIME OUT	RETURNED SHOP	TOTAL HOURS
AM PM	800 AM PM	430 AM PM	AM PM	

MATERIAL RECORD

QUANTITY	DESCRIPTION	COST
	PREVENTIVE MAINTENANCE CONTRACT	

CUSTOMER NAME (PRINT): SILVERSTEIN

CUSTOMER SIGNATURE:

SERVICEMAN SIGNATURE:

AUTHORIZATION FOR FIRE ALARM INTERRUPTION

The undersigned has been advised by Fire Service Inc. representative that it may be necessary to interrupt the fire protection service by disconnecting the system and/or a component in the performance of their assigned work.

The undersigned hereby assumes the responsibility for the notification of the authorities at the time the interruption is initiated and will take all of the precautions deemed necessary during this period of interruption and hold harmless Fire Service Inc. and its employees regarding interruption of fire protection service during their service of the equipment.

NAME DATE TIME

SERVICE PERFORMED & REMAINING

S/C. FREQ. MAINTENANCE CHECKING TESTING S/O ELECTM on Odorous Floors as SEQUENCE - ALL BELL/ELEV. LIGHTS / CLOSETS. H.E.D.'s. - as LISTED. SYSTEM O.K. / READY FOR OPERATION

(A) INACCESSIBLE (B) MISSING (C) DEFECTIVE (D) OTHER

FIRE SERVICE INCORPORATED

21310

Subsidiary of Firecom, Inc.
39-27 Fifty Ninth Street
Woodside, New York 11377
(718) 899-2311

REPORT OF FIELD SERVICE

LOCATIONS | **DEVICES**

FLOOR	PLANT			BASE	ZONE	S/D	TEST
48	ROOF						
	CEILING			4	086	PEC3T	✓
	CEILING			4	086	PEC3T	✓
	CEILING			4	086	PEC3T	✓
	CEILING			4	086	PEC3T	✓
	CEILING			4	086	PEC3T	✓
	CEILING			4	086	PEC3T	✓
48	DUCT	S/D		4	070	EDWDS	✓
48	DUCT	S/D		4	116	EDWDS	✓
48	DUCT	S/D		4	118	EDWDS	✓
48	DUCT	S/D		4	117	EDWDS	✓
48	DUCT	S/D		4	118	EDWDS	✓
48	DUCT	S/D		4	118	~~EDWDS~~ D138	✓

PREVENTIVE MAINTENANCE CONTRACT

41½ TEST & DEVICES OUTPUT FUNCTIONS ALARM - SPK/PAGE - STROBE / SHUTDOWN FANS.
(FORST ELECTRIC - 41½ FL (SOFTWARE / INSTALLATION) -

INVOICE TO:
7 W.T.C
N.Y.C

SERVICEMAN ASSIGNED: L. TORRES / F. ROSARIO	SEE AT JOB SITE: F.S.I
	DATE SCHEDULED: 4-26-00
CONTRACT #: S100818	TYPE OF SYSTEM: 2500
FEE SERVICE #	P.O. #
CALL AUHTORIZED BY	PHONE / EXT

☐ MAINTENANCE ☑ TEST
☐ JOB COMPLETE ☐ JOB INCOMPLETE
☐ SYSTEM ON LINE ☐ SYSTEM OFF LINE

DEPARTED SHOP	TIME IN	TIME OUT	RETURNED SHOP	TOTAL HOURS
AM PM	8:00 AM PM	4:30 PM	AM PM	

MATERIAL RECORD

QUANTITY	DESCRIPTION	COST

CUSTOMER NAME (PRINT): SILVERSTEIN.
CUSTOMER SIGNATURE:
SERVICEMAN SIGNATURE:

AUTHORIZATION FOR FIRE ALARM INTERRUPTION
The undersigned has been advised by Fire Service Inc. representative that it may be necessary to interrupt the fire protection service by disconnecting the system and/or a component in the performance of their assigned work.
The undersigned hereby assumes the responsibility for the notification of the authorities at the time the interruption is initiated and will take all of the precautions deemed necessary during this period of interruption and hold harmless Fire Service Inc. and its employees regarding interruption of fire protection service during their service of the equipment.

NAME DATE TIME

SERVICE PERFORMED & REMAINING

S/CONTRACT
AS PER CONTRACT CHECK TEST & SMOKE DEVICES DETECTORS - PEC
DUCTS ON ROOF M.E.R. PLANTS. - AS LISTED - (SILVERSTEIN BROTHERS
ALSO FACILITY ELEC/INSTALLATION FOREST/G.C./SILVERSTEIN TEST/STEPHENS/S&K/STRAUB

(A) INACCESSIBLE (B) MISSING (C) DEFECTIVE (D) OTHER

ON 41½ FLOOR. —

FIRE SERVICE INCORPORATED

21312

Subsidiary of Firecom, Inc.
39-27 Fifty Ninth Street
Woodside, New York 11377
(718) 899-2311

REPORT OF FIELD SERVICE

LOCATIONS | **DEVICES**

INVOICE TO: W.T.C.

N.Y.C.

FLOOR				CABLE	VENDOR	S/D	TEST
31	ELEC	A-B	(2)	2	197	BRK	✓
	TELEPH	A-B	(2)	2	197	BRK	✓
	COMM	A-B	(2)	2	197	BRK.	✓
	ELECT	C-D	(COAT) 2	2	186	BRK.	✓
	COMM	C-D	(COAT) 2	2	186	BRK	✓
	ELECT	D.W.	(2)	2	186	BRK	✓
	ELECT	F		3	016	PEC 3	✓
	ELECT	G		3	009	PEC 3	✓
	FREIGHT ELEV.			2	008	BRK	✓
	PASS ELEV.			2	008	BRK	✓
	SHUTTLE ELEV.			3	025	PEC 3	✓
	SECURITY CLOSET			3	009	PEC 3	✓
	CORE MER AREA		(3)	2	244	PEC 3T	✓
	CORE MER D/D		(2)	2	245	HACHIKI	✓
	W. MER AREA		(2)	3	002	PEC 3T	✓
	W. MER D/D		(2)	3	034	EDWIN	✓
30th	PASS ELEV.			2	007	BRK	✓
	FREIGHT ELEV			2	007	BRK	✓
	ELECT	A-B	(2)	2	184	BRK	✓
	TELEPH	A-B	(2)	2	184	BRK	✓
	COMM	A-B	(2)	2	184	BRK	✓
	ELECT	C-D	(2)	2	183	BRK	✓
	ELECT	D.W.		2	193	BRK	✓
	ELECT	F		3	015	PEC 3	✓
	ELECT	G/SEC.	(2)	3	008	PEC 3	✓
	TELEPH	C/COAT		2	183	BRK	✓
	COMM	C/COAT		2	183	BRK	✓
	SHUTTLE ELEV.			3	024	PEC 3	✓
	CORE MER CEILING		(3)	2	242	PEC 3T	✓
	CORE MER D/D		(2)	2	243	HACHIKI	✓
	W. MER AREA		(2)	3	001	PEC 3T	✓
	W. MER D/D		(2)	3	033	EDWIN	✓

SERVICEMAN ASSIGNED	SEE AT JOB SITE
J. TOLLEY / F. ROSARIO	F.S.D.
	DATE SCHEDULED: 5-2-00
CONTRACT # S/C 008818	TYPE OF SYSTEM: 8500
FEE SERVICE #	P.O. #
CALL AUHTORIZED BY	PHONE / EXT

☒ MAINTENANCE ☒ TEST
☐ JOB COMPLETE ☐ JOB INCOMPLETE
☐ SYSTEM ON LINE ☐ SYSTEM OFF LINE

DEPARTED SHOP	TIME IN	TIME OUT	RETURNED SHOP	TOTAL HOURS
AM PM	800 AM PM	430 AM PM	AM PM	

MATERIAL RECORD

QUANTITY	DESCRIPTION	COST
	PREVENTIVE MAINTENANCE CONTRACT	

CUSTOMER NAME (PRINT): SILVERSTEIN
CUSTOMER SIGNATURE:
SERVICEMAN SIGNATURE: J. Tolley – Rafael Rosario

AUTHORIZATION FOR FIRE ALARM INTERRUPTION
The undersigned has been advised by Fire Service Inc. representative that it may be necessary to interrupt the fire protection service by disconnecting the system and/or a component in the performance of their assigned work.
The undersigned hereby assumes the responsibility for the notification of the authorities at the time the interruption is initiated and will take all of the precautions deemed necessary during the period of interruption and hold harmless Fire Service Inc. and its employees regarding interruption of fire protection service during their service of the equipment.

TIME / DATE / NAME

X

SERVICE PERFORMED & REMAINING

Continue S/C. Prev. Maintenance on Smoke Detection Floor(s) 31/30 Solomon Areas. – Systems Check/Reset. –

To be Continue –

(A) INACCESSIBLE (B) MISSING (C) DEFECTIVE (D) OTHER

FIRE SERVICE INCORPORATED

21313

Subsidiary of Firecom, Inc.
39-27 Fifty Ninth Street
Woodside, New York 11377
(718) 899-2311

REPORT OF FIELD SERVICE

LOCATIONS | **DEVICES**

FLOOR	AREAS			CABLE	XMTR	S/D	TST
29	ELECT	A-B	(2)	2	182	BLK.	✓
	TELEPH	A-B	(2)	2	182	BLK	✓
	COMM	A-B	(2)	2	182	BLK	✓
	ELECT	C-D	(2)	2	181	BLK	✓
	ELECT	D.W.		2	181	BLK	✓
	ELECT	G		3	007	PEC3	✓
	SECURITY			3	007	PEC3	✓
	ELECT	F		3	014	PEC3	✓
	TELEPH	C		2	181	BLK	✓
	COMM	C		2	181	BLK	✓
	TELEPH	D/CONT		2	181	BLK	✓
	FREIGHT	ELEV. LOBBY		2	006	BLK	✓
	MAIN	ELEV. LOBBY		2	006	BLK	✓
	SHUTTLE	ELEV		3	030	PEC3	✓
	CORE	MEN CEILING		2	240	PEC3T	✓
	CORE	MEN CEILING		2	240	PEC3T	✓
29	CORE	MEN CEILING		2	240	PEC3T	✓
	CORE	MEN D/D		2	241	BOOTH#	✓
	CORE	MEN D/D.		2	241	BOOTH#	✓
	WEST	MEN AREA		3	032	PEC3T	✓
	WEST	MEN AREA		3	032	PEC3T	✓
	WEST	MEN D/D.		3	000	EDWDS	✓
	WEST	MEN D/D		3	000	EDWDS	✓
6TH	POWER RACK TROUBLE/INDICATE STATUS						
6TH	AMPLIFIER RACK TROUBLE/INDICATE STATUS						
1ST	WARDEN STATION (342-2) LIGHT CKT REMAIN (GROUNDED) - UNIT DISABLE - OUT SERVICE).						

INVOICE TO: 7 W.T.C.

N.Y.C.

SERVICEMAN ASSIGNED: J. TORRES / F. ROSARIO	SEE AT JOB SITE: F-J-D
	DATE SCHEDULED: 5-3-00
CONTRACT #: 5/C00 818	TYPE OF SYSTEM: 2500
FEE SERVICE #	P.O. #
CALL AUHTORIZED BY	PHONE / EXT

☒ MAINTENANCE ☐ TEST

☐ JOB COMPLETE ☐ JOB INCOMPLETE

☐ SYSTEM ON LINE ☐ SYSTEM OFF LINE

DEPARTED SHOP	TIME IN	TIME OUT	RETURNED SHOP	TOTAL HOURS
AM PM	800 AM PM	430 AM PM	AM PM	

MATERIAL RECORD

QUANTITY	DESCRIPTION	COST
	PREVENTIVE MAINTENANCE CONTRACT	

CUSTOMER NAME (PRINT): SILVERSTEIN

CUSTOMER SIGNATURE

SERVICEMAN SIGNATURE: J. Torres / Frank Rosario

AUTHORIZATION FOR FIRE ALARM INTERRUPTION
The undersigned has been advised by Fire Service Inc. representative that it may be necessary to interrupt the fire protection service by disconnecting the system and/or a component in the performance of their assigned work.
The undersigned hereby assumes the responsibility for the notification of the authorities at the time the interruption is initiated and will take all of the precautions deemed necessary during the period of interruption and hold harmless Fire Service Inc. and its employees regarding interruption of fire protection service during their service of the equipment.

NAME DATE TIME

SERVICE PERFORMED & REMAINING: PREV. MAINTENANCE / SERVICE CONTRACT CHECK TEST UNITS ON 29TH FL. (ALL AREAS) LISTED ALSO LOGGED ON 6TH FL / 1ST FL. SYSTEM BACK / RESET BACK TO OPERATION.

(A) INACCESSIBLE (B) MISSING (C) DEFECTIVE (D) OTHER

FIRE SERVICE INCORPORATED

21314

Subsidiary of Firecom, Inc.
39-27 Fifty Ninth Street
Woodside, New York 11377
(718) 899-2311

REPORT OF FIELD SERVICE

LOCATIONS | **DEVICES**

FLOOR	AREAS			CABLE	XTNDR	S/D	TST
27	ELECT	A		2	178	BRK	✓
	ELECT	B		2	178	BRK	✓
	ELECT	C		2	177	BRK	✓
	ELECT	D		2	177	BRK	✓
	TELEPH	A		2	178	BRK	✓
	TELEPH	B		2	178	BRK	✓
	TELEPH	C		2	177	BRK	✓
	TELEPH	D		2	177	BRK	✓
	CONN	A		2	178	BRK	✓
	CONN	B		2	178	BRK	✓
	CONN	C		2	177	BRK	✓
	CONN	D		2	177	BRK	✓
	FREIGHT	ELEV.		2	004	BRK	✓
	PASS	ELEV.		2	004	BRK	✓
	CORE	HER D	X/DT.	2	237	HOOKI	✓
	CORE	HER D	X DNT	2	237	HOOKI	✓
	LADIES	D/D	RET.	2	236	HOOKI	✓
	RETURN	SOUTH.		2	236	HOOKI	✓
	RETURN	NORTH		2	236	HOOKI	✓
26	ELECT	A-B	(X2)	2	176	BRK	✓
	TELEPH	A-B	(X2)	2	176	BRK	✓
	CONN	A-B	(X2)	2	176	BRK	✓
	ELECT	C-D	(X2)	2	175	BRK	✓
	TELEPH	C-D	(X2)	2	175	BRK	✓
	CONN	C-D	(X2)	2	175	BRK	✓
	FREIGHT	ELEV.		2	003	BRK	✓
	PASS	ELEV	1664	2	003	BRK	✓
	CORE	HER	D/D	2	235	HOOKI	✓
	CORE	HER	D/D	2	235	HOOKI	✓
	LADIES	RM	D/D RET	2	234	HOOKI	✓
	RETURN	SOUTH	D/D	2	234	HOOKI	✓
	RETURN	NORTH	D/D	2	234	HOOKI	✓

INVOICE TO: W.T.C.

N.Y.C

SERVICEMAN ASSIGNED: J. TORRES / F. ROSARIO	SEE AT JOB SITE: F.S.I
	DATE SCHEDULED: 5-9-00
CONTRACT #: SIC 00818	TYPE OF SYSTEM: J800
FEE SERVICE #	P.O. #
CALL AUHTORIZED BY	PHONE / EXT

☒ MAINTENANCE ☐ TEST

☐ JOB COMPLETE ☐ JOB INCOMPLETE

☐ SYSTEM ON LINE ☐ SYSTEM OFF LINE

DEPARTED SHOP	TIME IN	TIME OUT	RETURNED SHOP	TOTAL HOURS
AM PM	8:00 AM PM	4:30 AM PM	AM PM	

MATERIAL RECORD

QUANTITY	DESCRIPTION	COST
	PREVENTIVE MAINTENANCE CONTRACT	

CUSTOMER NAME (PRINT): SILVERSTEIN

CUSTOMER SIGNATURE

SERVICEMAN SIGNATURE

AUTHORIZATION FOR FIRE ALARM INTERRUPTION
The undersigned has been advised by Fire Service Inc. representative that it may be necessary to interrupt the fire protection service by disconnecting the system and/or a component in the performance of their assigned work.
The undersigned hereby assumes the responsibility for the notification of the authorities at the time the interruption is initiated and will take all of the precautions deemed necessary during this period of interruption and hold harmless Fire Service Inc. and its employees regarding interruption of the protection service during their service of the equipment.

TIME

DATE

NAME

SERVICE PERFORMED & REMAINING: Routine Sl. Contract - Prev. X Maintenance on Smoke Detection (Software Reset) AREAS LISTED above - System Back/Alarm. As per Operation & Also Repaired / Installed (1) Epson LX 810 Printer Replaced at 44th P. Security office Software Bottles. - Called and Wrote Printing - P.C. Activity. - Back in Operation -

(A) INACCESSIBLE (B) MISSING (C) DEFECTIVE (D) OTHER

FIRE SERVICE INCORPORATED

21315

Subsidiary of Firecom, Inc.
39-27 Fifty Ninth Street
Woodside, New York 11377
(718) 899-2311

REPORT OF FIELD SERVICE

LOCATIONS | **DEVICES**

FLOOR	Areas			Code	XTNDR	S/D	TST
28	Elect	A		2	180	DAK	V
"	Elect	B		2	180	DAK	V
"	Elect	C		2	179	DAK	V
"	Elect	D		2	179	DAK	V
"	Elect	DW		2	179	Dec3	V
"	Elect	F		3	179	Dec3	V
"	Elect	G		3	180	Dec3	V
"	Tel	A		2	180	DAK	V
"	Tel	B		2	180	DAK	V
"	Tel	C		2	179	DAK	V
"	Comm	A		2	180	DAK	V
"	Comm	B		2	180	DAK	V
"	Comm	C		2	179	DAK	V
"	Comm	D		2	179	DAK	V
"	Freight	Elev.		2	005	Edwards	V
"	Pass	Elev.		2	005	Edwards	V
"	Shuttle	Elev		3	005	Dec3	V
"	Core	MER		2	239	Honeywell	V
"	Core	MER		2	239	Honeywell	V
"	West	MER Ceiling		3	057	Dec3T	V
"	West	MER Ceiling		3	057	Dec3T	V
"	West	MER Ceiling		3	057	Dec3T	V
"	West	MER S/D		3	047	DI3B	V
(D)	No Detector in Security Closet.						

INVOICE TO: T.W.T.C.
N.Y.C.

SERVICEMAN ASSIGNED: J. Jones / T. Rosario	SEE AT JOB SITE: F.S.D.
CONTRACT #: S/C 00818	DATE SCHEDULED: 5-10-00
FEE SERVICE #	TYPE OF SYSTEM: 8500
CALL AUTHORIZED BY	P.O #
PHONE	EXT

☒ MAINTENANCE ☒ TEST
☐ JOB COMPLETE ☐ JOB INCOMPLETE
☐ SYSTEM ON LINE ☐ SYSTEM OFF LINE

DEPARTED SHOP	TIME IN	TIME OUT	RETURNED SHOP	TOTAL HOURS
AM PM	8:00 AM PM	4:30 AM PM	AM PM	

MATERIAL RECORD

QUANTITY	DESCRIPTION	COST
	PREVENTIVE MAINTENANCE CONTRACT	

CUSTOMER NAME (PRINT): ALVIN KRUTH
CUSTOMER SIGNATURE:
SERVICEMAN SIGNATURE:

AUTHORIZATION FOR FIRE ALARM INTERRUPTION
The undersigned has been advised by Fire Service Inc. representatives that it may be necessary to interrupt the fire protection service by disconnecting the system and/or a component in the performance of their assigned work.
The undersigned hereby assumes the responsibility for the notification of the authorities at the time the interruption is instated and will take all of the precautions deemed necessary during this period of interruption and hold harmless Fire Service Inc. and its employees regarding interruption of the protection service during their service of the equipment.

TIME
DATE
NAME

SERVICE PERFORMED & REMAINING

Continue S/Contract - Prev. Maintenance
Des. Smoke Detectors Shown on Floor Area Listed above -
System Out Of Service As Per Operation

(A) INACCESSIBLE (B) MISSING (C) DEFECTIVE (D) OTHER

FIRE SERVICE INCORPORATED

Subsidiary of Firecom, Inc.
39-27 Fifty Ninth Street
Woodside, New York 11377
(718) 899-2311

12047

REPORT OF FIELD SERVICE

LOCATIONS | **DEVICES**

FLOOR	Area			Code	X Tum	S/D	Test
40	Elect	A			207	BEK	✓
"	Elect	B			207	BEK	✓
"	Elect	C			"	Apollo	✓
"	Elect	D			"	Apollo	✓
"	Elect	F	(B)				—
"	Elect	G			078	FEC3	✓
40	Tel	A			207	BEK	✓
	Tel	B			207	BEK	✓
"	Storage Closet					Apollo	✓
"	Conf Closet					Apollo	✓
"	Comm	A			207	BEK	✓
"	Comm	B			207	BEK	✓
"	Storage					Apollo	✓
"	Storage					Apollo	✓
40	Freight Elev		(D)		017	BEK	✓
"	Pass Elev				017	BEK	✓
"	Shuttle Elev				006	DI3	✓
"	Security Closet				078	FEC3	✓
"	Core	MER	Ceiling		208	Apollo	✓
"	Core	MER	Ceiling		208	Apollo	✓
"	Core	MER	D/D		271	Apollo	✓
"	Core	MER	D/D		271	Apollo	✓

(B) Head Missing

(D) Head Inside the Ceiling

INVOICE TO: 7 WTC
WHC

SERVICEMAN ASSIGNED	SEE AT JOB SITE
J. Torres	F.S.D.
F. Vasco	DATE SCHEDULED 5-10-00
CONTRACT # S/C 00818	TYPE OF SYSTEM 8500
FEE SERVICE #	P.O. #
CALL AUHTORIZED BY	PHONE / EXT

☒ MAINTENANCE ☒ TEST
☐ JOB COMPLETE ☐ JOB INCOMPLETE
☐ SYSTEM ON LINE ☐ SYSTEM OFF LINE

DEPARTED SHOP	TIME IN	TIME OUT	RETURNED SHOP	TOTAL HOURS
AM PM	8:00 AM PM	4:30 AM PM	AM PM	

MATERIAL RECORD

QUANTITY	DESCRIPTION	COST
	PREVENTIVE MAINTENANCE CONTRACT	

CUSTOMER NAME (PRINT) SILVERSTEIN
CUSTOMER SIGNATURE
SERVICEMAN SIGNATURE

AUTHORIZATION FOR FIRE ALARM INTERRUPTION
The undersigned has been advised by Fire Service Inc. representative that it may be necessary to interrupt the fire protection service by disconnecting the system and/or a component in the performance of their assigned work.
The undersigned hereby assumes the responsibility for the notification of the authorities at the time the interruption is initiated and will take all of the precautions deemed necessary during this period of interruption and hold harmless Fire Service Inc. and its employees regarding interruption of fire protection service during their service of the equipment.

NAME DATE TIME

SERVICE PERFORMED & REMAINING

Performed Semi-Annual Maintenance & Testing of Fire Alarm System as listed above. System Operated as per Operations.

(A) INACCESSIBLE (B) MISSING (C) DEFECTIVE (D) OTHER

FIRE SERVICE INCORPORATED

91762

SUBSIDIARY OF FIRECOM INC.

39-27 FIFTY NINTH STREET
WOODSIDE, NEW YORK 11377
(718)899-2311

REPORT OF FIELD SERVICE

INVOICE TO

SERVICED

7 WTC.
NY NY

CALL AUTHORIZED BY	CONTRACT #	FEE SERVICE #	FJ #	P O #	SEE AT JOB SITE
R.T Shop	SC# 0818				F.S.D

PHONE	EXT	DATE SCHEDULED	TIME SCHEDULED	SERVICEMAN ASSIGNED
		4/26/00	AM	C. Tobar

MATERIAL RECORD

QUANTITY ISSUED	QUANTITY B/O	FCI NO	DESCRIPTION	UNIT PRICE	PER	TOTAL AMOUNT
			PREVENTIVE MAINTENANCE CONTRACT			

CHECK APPROPRIATE BOX

- ☐ O.C
- ☐ I & T
- ☐ FEE CALL
- ☐ DELIVERY
- ☐ DEMO
- ☐ EMERGENCY CALL
- ☒ CONTRACT CALL
- ☐ PICK UP
- ☐ DEMO OWNER
- ☐ SURVEY

DEPARTED SHOP	TIME IN	TIME OUT	RETURNED SHOP	TOTAL HOURS	START MILEAGE	END MILEAGE	MISC EXPENSE	CAR FARE
8:00 AM	9:00 AM	4:30 PM		8:00				

- ☐ MAT REQD ☐ PARTIAL
- ☐ OTHER ☐ LABOR REQD

I & T COMPLETE ☐ CALL COMPLETE ☐

SERVICE DATE

WILL RETURN ON

CUSTOMER SIGNATURE

SERVICEMAN SIGNATURE

AUTHORIZATION FOR FIRE ALARM INTERRUPTION

The undersigned has been advised by Fire Service Inc representative that it may be necessary to interrupt the fire protection service by disconnecting the system and/or a component in the performance of their assigned work.

The undersigned hereby assumes the responsibility for the notification of the authorities at the time the interruption is initiated and will take all of the precautions deemed necessary during the period of interruption and hold Harmless Fire Service Inc. and its employees regarding interruption of the protection service during their service of the equipment.

Date

Name

PROBLEM—AS DESCRIBED

Preventive Maintenance

SERVICE PERFORMED

I Assisted To Tony Torres Cleaned & Tested of Smoke detectors (Duct and Area Located on 48th floor M.E.P.. All Smoke detector Tested Work properly Also Assisted Tech.s. To Test 47th floor Devices Coloration floor

WORK REMAINING

FCI 155
REV 6186

FIRE SERVICE INCORPORATED

26061

Subsidiary of Firecom, Inc.
39-27 Fifty Ninth Street
Woodside, New York 11377
(718) 899-2311

REPORT OF FIELD SERVICE

LOCATIONS | **DEVICES**

FLOOR	AREA	CLOSET		CABLE	ZONE	S/D	TEST
36	ELEV. LOBBY			2	013	BLK	✓
	FREIGHT ELEV			2	013	BLK	✓
	ELEV SHAFT			4	002	PEC 3	✓
	5½ ELECTRIC			4	074	PEC 3	✓
	SECURITY CLOSET			4	074	PEC 3	✓
	CORE MEN CEILING			2	256	PEC 3T	✓
	CORE MEN	4		2	256	PEC 3T	✓
	CORE MEN	41		2	256	PEC 3T	✓
	CORE DUCT DET.			2	255	HOCHIKI	✓
	CORE DUCT DET.			2	255	HOCHIKI	✓
	CORE DUCT DET.			2	255	HOCHIKI	✓
	ELECT.	A		2	198	BLK	✓
	COMM	A		2	198	BLK	✓
	TELEPH	A		2	198	BLK	✓
	TELEPH	B		2	198	BLK	✓
	ELECT	B		2	198	BLK	✓
	COMM	B		2	198	BLK	✓
	ELECT	C		2	197	BLK	✓
	COMM	C		2	197	BLK	✓
	TELEPH	C		2	197	BLK	✓
	ELECT	D		2	197	BLK	✓
	TELEPH	D		2	197	BLK	✓
	ELECT	D1		2	197	BLK	✓
	ELECT	F		4	050	PEC 3	✓
36	WEST	MEN	AREA	4	026	PEC 3T	✓
	WEST	MEN	AREA	4	026	PEC 3T	✓
	WEST	MEN	D/D	4	098	EDWARDS	✓
	WEST	MEN	D/D	4	098	EDWARDS	✓

PREVENTIVE MAINTENANCE CONTRACT

INVOICE TO:
D.W.T.C.
N.Y.C.

SERVICEMAN ASSIGNED: J. TORRES / F. ROSARIO	SEE AT JOB SITE: F.S.I
	DATE SCHEDULED: 4-18-00
CONTRACT #: 00 818	TYPE OF SYSTEM: 8500
FEE SERVICE #	P.O. #
CALL AUHTORIZED BY	PHONE / EXT

☒ MAINTENANCE ☐ TEST
☐ JOB COMPLETE ☐ JOB INCOMPLETE
☐ SYSTEM ON LINE ☐ SYSTEM OFF LINE

DEPARTED SHOP	TIME IN	TIME OUT	RETURNED SHOP	TOTAL HOURS
8:00 AM/PM	9:00 AM/PM	4:30 AM/PM	AM/PM	

MATERIAL RECORD

QUANTITY	DESCRIPTION	COST

CUSTOMER NAME (PRINT): ROSENSTEIN
CUSTOMER SIGNATURE:
SERVICEMAN SIGNATURE: Frederick Rosario

AUTHORIZATION FOR FIRE ALARM INTERRUPTION
The undersigned has been advised by Fire Service Inc. representative that it may be necessary to interrupt the fire protection service by disconnecting the system and/or a component in the performance of their assigned work.
The undersigned hereby assumes the responsibility for the notification of the authorities at the time the interruption is initiated and will take all of the precautions deemed necessary during this period of interruption and hold harmless Fire Service Inc. and its employees regarding interruption of fire protection service during their service of the equipment.

NAME DATE TIME

SERVICE PERFORMED & REMAINING: CONTINUE S/CONTRACT.
PREV. MAINTENANCE ON SMOKE DETECTORS (UNITS ON BOTTOM FLOORS ROOF/CLOSETS - ELEV LOBBIES - MEN'S/DUCTS UNITS AS LISTED ABOVE. — SYSTEMS ACK/RESETED BACK TO OPERATION. —

(A) INACCESSIBLE (B) MISSING (C) DEFECTIVE (D) OTHER

FIRE SERVICE INCORPORATED

,26063

Subsidiary of Firecom, Inc.
39-27 Fifty Ninth Street
Woodside, New York 11377
(718) 899-2311

REPORT OF FIELD SERVICE

LOCATIONS				DEVICES			
FLOOR				CABLE	XTNDR	S/D	TST
38	ELECT	A-B	(2)	2	202	BRK	✓
	TELEPH	A-B	(2)	2	202	BRK	✓
	COMM	A-B	(2)	2	202	BRK	✓
	ELECT	C		2	203	BRK	✓
	ELECT	D		2	203	BRK	✓
	ELECT	D1		2	203	EDWDS	✓
	ELECT	G		4	076	PEC3	✓
	SECURITY			4	076	PEC3	✓
	ELECT	F		4	052	PEC3	✓
	FREIGHT ELEV			2	015	BRK	✓
	PASS ELEV.			2	015	BRK	✓
	ELEV SHUTTLE			4	004	PEC3	✓
	CORE HER	AREA	(3)	2	260	PEC3T	✓
	CORE HER D/D		(2)	2	261	HOCHIKI	✓
	W. HER AREA			4	028	PEC3T	✓
	W. HER D/D			4	100	EDWDS	✓
38	W. HER AREA	AUDITH		4	046	PEC3T	✓
38	W. HER D/D	AUDITH		4	127	EDWDS	✓
37	PASS/FREIGHT		(2)	2	014	BRK	✓
	TELEPH	A-B	(2)	2	200	BLK	✓
	ELECT	A-B	(2)	2	200	BLK	✓
	COMM	A-B	(2)	2	200	BLK	✓
	TELEPH	C-D	(2)	2	199	BLK	✓
	ELECT	C-D	(2)	2	199	BLK	✓
	COMM	C		2	199	BLK	✓
	ELECT	D1		2	199	BLK	✓
	ELECT	F		4	051	PEC3	✓
	ELECT	G		4	075	PEC3	✓
	SECURITY			4	075	PEC3	✓
	ELEV. SHUTTLE			4	003	PEC3	✓
	CORE HER	AREA	(3)	2	258	PEC3T	✓
	CORE HER D/D		(2)	2	257	HOCHIKI	✓
	W. HER	AREA	(2)	4	027	PEC3T	✓
	W. HER	D/D	(2)	4	099	EDWDS	✓

INVOICE TO:
W.T.C.
(Solomon Brothers)
N.Y.C.

SERVICEMAN ASSIGNED: J. Torres / F. Rosario	SEE AT JOB SITE: F.S.D
	DATE SCHEDULED: 4-12-00
CONTRACT #: S/C 00 818	TYPE OF SYSTEM: 8500
FEE SERVICE #	P.O. #
CALL AUHTORIZED BY	PHONE / EXT
☒ MAINTENANCE	☐ TEST
☐ JOB COMPLETE	☐ JOB INCOMPLETE
☐ SYSTEM ON LINE	☐ SYSTEM OFF LINE

DEPARTED SHOP	TIME IN	TIME OUT	RETURNED SHOP	TOTAL HOURS
AM / PM	8:00 AM / PM	4:30 AM / PM	AM / PM	

MATERIAL RECORD

QUANTITY	DESCRIPTION	COST
	PREVENTIVE MAINTENANCE CONTRACT	

CUSTOMER NAME (PRINT): SILVERSTEIN
CUSTOMER SIGNATURE
SERVICEMAN SIGNATURE

AUTHORIZATION FOR FIRE ALARM INTERRUPTION
The undersigned has been advised by Fire Service Inc. representative that it may be necessary to interrupt the fire protection service by disconnecting the system and/or a component is the performance of their assigned work.
The undersigned hereby assumes the responsibility for the notification of the authorities at the time the interruption is initiated and will take all of the precautions deemed necessary during this period of interruption and hold harmless Fire Service Inc. and its employees regarding interruption of fire protection service during their service of the equipment.

NAME / DATE / TIME

SERVICE PERFORMED & REMAINING: Certified S/C Contract / - Preventive Maintenance / Smoke Detectors on Floors 38/37 - Areas Listed. / Multi Channel Tested / Reviewed - Battery Unit Jack Reported Properly - / To Owner S/C.

(A) INACCESSIBLE (B) MISSING (C) DEFECTIVE (D) OTHER

FIRE SERVICE INCORPORATED

21920

Subsidiary of Firecom, Inc.
39-27 Fifty Ninth Street
Woodside, New York 11377
(718) 899-2311

REPORT OF FIELD SERVICE

LOCATIONS | **DEVICES**

FLOOR				CABLE	XTNDR	S/D	TST CLEAN
39	ELECT	A		2	205	BRK	✓
	TELEPH	A		2	205	BRK	✓
	COMM	A		2	205	BRK	✓
	ELECT	B		2	205	BRK	✓
	COMM	B		2	205	BRK	✓
	TELEPH	B		2	205	BRK	✓
	ELECT	C		2	204	BLK	✓
	ELECT	D		2	204	BLK	✓
	ELECT	DW-1		2	205	BLK	✓
	ELECT	E		4	053	PEC 3	✓
	ELECT	G		4	077	PEC3	✓
	SECURITY			4	077	PEC 3	✓
	ELEV. PASS			2	016	BRK	✓
	FREIGHT ELEV.			2	016	BRK	✓
	ELEV. SHUTTLE			4	005	PEC3	✓
	CORE HER AREA			2	262	PEC 3	✓
	CORE HER AREA			2	262	PEC 3	✓
	CORE HER AREA			2	262	PEC3T	✓
	CORE HER D/D			2	263	Hochiki	✓
	CORE HER D/D			2	263	Hochiki	✓
39	WEST HER D/D			4	101	EDWDS	✓
	W. HER AREA			4	029	PEC3T	✓
	D/D CEILING	RECP.T.		2	254	S-5022 Apollo	✓
	D/D	〃	〃	2	254	〃	✓
	D/D	〃	〃	2	254	〃	✓
	D/D	〃	〃	2	254	〃	N/A
	D/D	〃	〃	2	254	〃	N/A

INVOICE TO:
J.W.T.C.
(Solomon Brothers)
N.Y.C.

SERVICEMAN ASSIGNED	SEE AT JOB SITE
J. Torres / F. Rosario	F.S.D
CONTRACT # S/C 00818	DATE SCHEDULED 4-11-00
FEE SERVICE #	TYPE OF SYSTEM 8500
CALL AUHTORIZED BY	P.O. # / PHONE / EXT

☐ MAINTENANCE ☐ TEST
☐ JOB COMPLETE ☐ JOB INCOMPLETE
☐ SYSTEM ON LINE ☐ SYSTEM OFF LINE

DEPARTED SHOP	TIME IN	TIME OUT	RETURNED SHOP	TOTAL HOURS
800 AM PM	800 AM PM	330 PM	330 PM	

MATERIAL RECORD

QUANTITY	DESCRIPTION	COST
	PREVENTIVE MAINTENANCE CONTRACT	

CUSTOMER NAME (PRINT)
CUSTOMER SIGNATURE
SERVICEMAN SIGNATURE

AUTHORIZATION FOR FIRE ALARM INTERRUPTION
The undersigned has been advised by Fire Service Inc. representative that it may be necessary to interrupt the fire protection service by disconnecting the system and/or a component in the performance of their assigned work.
The undersigned hereby assumes the responsibility for the notification of the authorities at the time the interruption is initiated and will take all of the precautions deemed necessary during this period of interruption and hold harmless *Fire Service Inc. and its employees* regarding interruption of the protection service during their service of the equipment.

DATE
TIME
NAME

SERVICE PERFORMED & REMAINING

S/CONTRACT - PREV. MAINTENANCE (SMOKE) DETECTION PLUS E EQUIPMENT - ON - 39TH FLOOR - (AREAS LISTED) - SYSTEM LEFT/RESET AS PER OPERATION

(A) INACCESSIBLE (B) MISSING (C) DEFECTIVE (D) OTHER

(39)

FIRE SERVICE INCORPORATED

Subsidiary of Firecom, Inc.
39-27 Fifty Ninth Street
Woodside, New York 11377
(718) 899-2311

11784

REPORT OF FIELD SERVICE

LOCATIONS			DEVICES				
FLOOR				S/D	ZONE	STNDR	TST
23	MECH	RM	D/D	Apollo	2	264	✓
23	MECH	RM	D/D	Apollo	2	264	✓
23	MECH	RM. AREA	HEAT	Apollo	2	268	✓
23	MECH	RM AREA	HEAT	Apollo	2	268	✓
23	BUNK	RM AREA		Apollo	2	269	✓
23	BUNK	RM AREA		Apollo	2	269	✓
23	CONF. RM/CLASS RM (S. WEST CORNER)		(4) UNDER FLOOR		2	265	✓
23	CONF RM/CLASS RM (S. W. CORNER)		(4) U/F.		2	265	✓
23	QUATER'S MASTER UNDER/FLOOR -		(3)		2	266	✓
23	MOTOR/A RM U/FLOOR		(4)		2	266	✓
23	WATCH COMM/CENTER UNDER/FLOOR. -		(9)		2	266	✓
7	TANK RM AREA/COMBO		(2)		1-110		✓
7	GENERATOR RM		(5)		1-110		✓
47	RADIO COMM. ROOM. (ROOF)		(2) AREA/COMBO	Apollo	2-270		✓
23	MANUAL PULL STATIONS		(3)		2-032		✓

INVOICE TO:
T.W.T.C
U.Y.C MAYOR'S OFFICE
23rd Fl.

SERVICEMAN ASSIGNED	SEE AT JOB SITE
J. TORRES / F. ROSADO	F.S.I.
	DATE SCHEDULED: 4-7-00
CONTRACT #	TYPE OF SYSTEM: 8500
FEE SERVICE #	PO #
CALL AUTHORIZED BY	PHONE / EXT

☒ MAINTENANCE ☐ TEST
☐ JOB COMPLETE ☐ JOB INCOMPLETE
☐ SYSTEM ON LINE ☐ SYSTEM OFF LINE

DEPARTED SHOP	TIME IN	TIME OUT	RETURNED SHOP	TOTAL HOURS
8:30 AM/PM	9:30 AM/PM	4:30 PM	AM/PM	

MATERIAL RECORD

QUANTITY	DESCRIPTION	COST
	PREVENTIVE MAINTENANCE CONTRACT	

CUSTOMER NAME (PRINT)
CUSTOMER SIGNATURE Ray Lynch JJ
SERVICEMAN SIGNATURE

AUTHORIZATION FOR FIRE ALARM INTERRUPTION
The undersigned has been advised by Fire Service Inc. representative that it may be necessary to interrupt the fire protection service by disconnecting the system and/or a component in the performance of their assigned work.
The undersigned hereby assumes the responsibility for the notification of the authorities at the time the interruption is initiated and will take all of the precautions deemed necessary during the period of interruption and hold harmless Fire Service Inc. and its employees regarding interruption of fire protection service during their service of the equipment.

NAME DATE TIME

SERVICE PERFORMED & REMAINING

Continuing S/Contract Prev. Maintenance / Located South of Smoke Detectors U/Floors Areas. - (As Listed) On 23rd & 47th & 07th Floors - (As Listed). -
Also Tested (3) Manual pull stations - (2-032). - Check/Smoke Alarm/Trouble Voltages O.K. -

(A) INACCESSIBLE (B) MISSING (C) DEFECTIVE (D) OTHER

FIRE SERVICE INCORPORATED

26064

Subsidiary of Firecom, Inc.
39-27 Fifty Ninth Street
Woodside, New York 11377
(718) 899-2311

(SHAFT'S)

REPORT OF FIELD SERVICE

LOCATIONS | **DEVICES**

FLOOR				CABLE	X/NOR	S/D	TST
47	SHUTTLE ELEV	WEST		4	037	PEC3T	✓
47	SHUTTLE ELEV.	EAST		4	037	PEC3T	✓
43	E.H.R. PE1.2 (BATH RM ENT.)			4	064	PEC3	✓
16	E.H.R	AREA	EAST	1	195	BRK	✓
16	E.H.R	AREA	EAST	1	195	BRK	✓
16	E.H.R	D/D	EAST	1	254	EDWDS	✓
16	EHR	AREA	WEST	1	195	BRK	✓
16	E.H.R	D/D	WEST	1	254	EDWDS	✓
15	E.H.R	AREA	WEST	1	192	BRK	✓
15	E.H.R	AREA	EAST	1	192	BLK	✓
15	E.H.R	AREA	EAST	1	192	BLK	✓
3RD	SHUTTLE ELEV.	SHAFT		3	049	PEC3T	✓
2	E.H.R HE 3+2			3	005	PEC3T	✓

PREVENTIVE MAINTENANCE CONTRACT

INVOICE TO: 7 W.T.C.
N.Y.C.

SERVICEMAN ASSIGNED: J. TORRES, F. ROSARIO	SEE AT JOB SITE: F.J.
	DATE SCHEDULED: 4-7-00
CONTRACT #: S/C00 818	TYPE OF SYSTEM: 8500
FEE SERVICE #	P.O. #
CALL AUHTORIZED BY	PHONE / EXT

☒ MAINTENANCE ☒ TEST
☐ JOB COMPLETE ☐ JOB INCOMPLETE
☐ SYSTEM ON LINE ☐ SYSTEM OFF LINE

DEPARTED SHOP	TIME IN	TIME OUT	RETURNED SHOP	TOTAL HOURS
630 AM (PM)	430 AM (PM)	830 AM (PM)	AM PM	

P.H.

MATERIAL RECORD

QUANTITY	DESCRIPTION	COST

CUSTOMER NAME (PRINT): PAT. KINSELLA (For J. Corrigan)
CUSTOMER SIGNATURE:
SERVICEMAN SIGNATURE:

AUTHORIZATION FOR FIRE ALARM INTERRUPTION
The undersigned has been advised by Fire Service Inc. representatives that it may be necessary to interrupt the fire protection service by disconnecting the system and/or a component in the performance of their assigned work.
The undersigned hereby assumes the responsibility for the notification of the authorities at the time the interruption is initiated and will take all of the precautions deemed necessary during this period of interruption and hold harmless Fire Service Inc. and its employees regarding interruption of the protection service during their service of the equipment.

NAME DATE TIME

SERVICE PERFORMED & REMAINING

Rec. Maintenance Elevators SHAFTS - S/Detection (as listed) Cleaned by OTIS Mechanic - and E.H.R.'s Areas - System Reset Restored Back to Operation. —

(A) INACCESSIBLE (B) MISSING (C) DEFECTIVE (D) OTHER

(16)

FIRE SERVICE INCORPORATED

26059

Subsidiary of Firecom, Inc.
39-27 Fifty Ninth Street
Woodside, New York 11377
(718) 899-2311

REPORT OF FIELD SERVICE

LOCATIONS / DEVICES

FLOOR	PRESS	RM	XMTR	S/D	SERIAL	TEST
23	U/F LOBBY		2-266	DIA-3	E6112A3	✓
	U/F		2-266	"	E9412A3	✓
	U/F		2-266	"	E6112A3	✓
	U/F		2-266	"	E8112A3	✓
*	U/F		N/A - LOCATION NEEDED			—
23	E.O. CENTR					
	PODIUM	U/F	2-267	DIA-3	E9430Y4	✓
	PODIUM	U/F	2-267	DIA-3	E9438Y4	✓
	PODIUM	U/F	2-267	DIA-3	E9438Y41	✓
23	E.O.C HEATERS					
	# 1-4	TWR	2-267	DIA-3		✓
	# 5-8	TWR	2-267	DIA-3		✓
	# 9-12	TWR	2-267	DIA-3		✓
	# 13-16	TWR	2-267	DIA-3		✓
	# 17-20	TWR	2-267	DIA-3		✓
	# 21-24	TWR	2-267	DIA-3		✓
	# 25-28	TWR	2-267	DIA-3		✓
	# 29-32	TWR	2-267	DIA-3		✓

TO BE RETURNED

INVOICE TO:
T.W.T.C.
O.E.M. - 23rd FL.
N.Y.C.
MAYOR'S OFFICE

SERVICEMAN ASSIGNED: J. TORRES / T. ROSARIO	SEE AT JOB SITE: F.S.I / RAY LYNCH
CONTRACT #: 4-6004	DATE SCHEDULED: 4-6-00
FEE SERVICE #: 5/6 00	TYPE OF SYSTEM: 8100
CALL AUHTORIZED BY	PHONE / EXT

☒ MAINTENANCE ☐ TEST
☒ JOB COMPLETE ☐ JOB INCOMPLETE
☐ SYSTEM ON LINE ☐ SYSTEM OFF LINE

DEPARTED SHOP	TIME IN	TIME OUT	RETURNED SHOP	TOTAL HOURS
8:00 AM/PM	9:00 AM/PM	4:30 AM/PM	AM/PM	

MATERIAL RECORD

QUANTITY	DESCRIPTION	COST
	PREVENTIVE MAINTENANCE CONTRACT	

CUSTOMER NAME (PRINT): Ray Lynch F.S.I.
CUSTOMER SIGNATURE:
SERVICEMAN SIGNATURE:

AUTHORIZATION FOR FIRE ALARM INTERRUPTION: The undersigned has been advised by Fire Service Inc. representatives that it may be necessary to interrupt the fire protection service by disconnecting the system and/or a component in the performance of their assigned work. The undersigned hereby assumes the responsibility for the notification of the authorities at the time the interruption is initiated and will take all of the precautions deemed necessary during this period of interruption and hold harmless Fire Service Inc. and its employees regarding interruption of fire protection service during their service of the equipment.

NAME / DATE / TIME

SERVICE PERFORMED & REMAINING: Perf. Maintenance on Smoke Detectors Units -- Located on 23rd Fl. - Areas / Underfloor - (As Listed above) Units / Terminated Directly to Class 'E' System. NOTE: Units Under Air Floors - Tiles / Rugs Needed to be Lifted. -- & Units Search / Located. -- Escort Needed.

(A) INACCESSIBLE (B) MISSING (C) DEFECTIVE (D) OTHER

FIRE SERVICE INCORPORATED

26060

Subsidiary of Firecom, Inc.
39-27 Fifty Ninth Street
Woodside, New York 11377
(718) 899-2311

REPORT OF FIELD SERVICE

LOCATIONS	DEVICES				
FLOOR					
47	ELEV SHAFT CAR 44/47 SHUTTLE				
	CABLE 4	XTNDR	037	S/O PEC 3T	
46	KITCHEN SHUTTLE #38 CAR				
	CABLE 4	036	PEC 3T		
46	FREIGHT SHUTTLE HKEY ROOM				
	4-036	PEC 3T			
47	EHR CAR 21-28				
	CABLE 2-220	BLK			
47	EHR CAR 21-28				
	CABLE 2-220	BLK.			
47	EHR CAR 21-28				
	CABLE 4 067	PEC 3			
46	EHR HKE 2-3				
	CABLE 4 065	PEC 3			
46	EHR HKEY				
	CABLE 4-066	PEC 3			
31	EHR AREA				
	CABLE 1-188	(2) BLK.			
31	EHR DID ECR				
	CABLE 2	246	(1) Hatiki SIF24		
31	EHR AREA - CABLE 1-	188 (1) BLK.			
	EHR DID ECR CABLE -	2- 246 Hatiki (1)			

INVOICE TO: 7 W.T.C
N.Y.C.
(OTIS)

SERVICEMAN ASSIGNED: J. TORRES / F. ROSARIO	SEE AT JOB SITE: FJ.) / OTIS
	DATE SCHEDULED: 4-6-00
CONTRACT #: S/C 00818	TYPE OF SYSTEM: 8J00
FEE SERVICE #	PO #
CALL AUHTORIZED BY	PHONE / EXT

☑ MAINTENANCE ☐ TEST
☐ JOB COMPLETE ☑ JOB INCOMPLETE
☐ SYSTEM ON LINE ☐ SYSTEM OFF LINE

DEPARTED SHOP	TIME IN	TIME OUT	RETURNED SHOP	TOTAL HOURS
AM PM	430 AM PM	830 AM PM	AM PM	4 P.H.

MATERIAL RECORD

QUANTITY	DESCRIPTION	COST
	PREVENTIVE MAINTENANCE CONTRACT	

CUSTOMER NAME (PRINT): PAT KINSELLA (For J. Connyer)
CUSTOMER SIGNATURE
SERVICEMAN SIGNATURE: Jack Torres

AUTHORIZATION FOR FIRE ALARM INTERRUPTION
The undersigned has been advised by Fire Service Inc. representative that it may be necessary to interrupt the fire protection service by disconnecting the system and/or a component in the performance of their assigned work.
The undersigned hereby assumes the responsibility for the notification of the authorities at the time the interruption is initiated and will take all of the precautions deemed necessary during this period of interruption and hold harmless Fire Service Inc. and its employees regarding interruption of fire protection service during their service of the equipment.

NAME / DATE / TIME

SERVICE PERFORMED & REMAINING

CHECK TEST OF ELEVATOR SHAFT / EHR'S AREAS S/DETECTORS
LISTED BELOW AS PER CONTRACT.
SYSTEM OPERATIONAL
TO BE CONTINUED

(A) INACCESSIBLE (B) MISSING (C) DEFECTIVE (D) OTHER

FIRE SERVICE INCORPORATED

Subsidiary of Firecom, Inc.
39-27 Fifty Ninth Street
Woodside, New York 11377
(718) 899-2311

11756

REPORT OF FIELD SERVICE

LOCATIONS | **DEVICES**

INVOICE TO: 7W.T.C
N.Y.C

FLOOR				CABLE	XTNDR	S/D	TST CLEAN
45	SHUTTLE ELEV			4	022	PEC 3	✓
	PASS ELEV.			2	022	BRK	✓
	FREIGHT ELEV			2	022	BRK	✓
	SHUTTLE KITCHN			4	012	PEC3T	✓
	COMM 'B'			2	217	BRK	✓
	TELEPH B			2	217	BRK	✓
	ELECT B			2	217	BRK	✓
	'G' ELECT. CLOSET			4	013	PEC 3	✓
	SECURITY CLOSET			4	083	PEC 3	✓
	ELECT A			2	217	BRK	✓
	COMM A			2	217	BRK	✓
	AREA 'D' STAIR			4	063	PEC3T	✓
	'F' ELECTRIC			4	059	PEC3T	✓
	EAST A/V PROJECT			4	091	PEC3T	✓
	SHAFT/PROJ. ROOM			4	089	PEC 3	✓
	D/D AHV 45-1			4	123	EDWDS	✓
	D/D TF 45-3			4	094	EDWDS	✓
45	E/EV SHUTTLE			4	019	PEC 3	✓
	D/D TF 45-1			4	092	EDWDS	✓
	D/D AHV 45-2			4	124	EDWDS	✓
	AREA STAIR			4	003	PEC 3	✓
44	ELECT	A-B	(2)	2	215	BRK	✓
	COMM	A-B	(2)	2	215	BRK	✓
	TELEPH	A-B	(2)	2	215	BRK	✓
	E/EV PASS.			4	021	BRK	✓
	FREIGHT E/EV			4	021	BRK	✓
	E/EV. SHUTTLE			4	010	PEC3	✓
	E/EV. SHUTTLE			4	010	PEC 3	✓
	ELECT. 'F'			4	058	PEC 3	✓
	ELECT 'G'			4	082	PEC 3	✓
	SEC. CLOSET			4	082	PEC 3	✓
	WEST MEN CEILING			4	834	PEC3T	✓
	WEST MEN	D/D		4	112	EDWDS	✓

SERVICEMAN ASSIGNED	SEE AT JOB SITE
J. TORRES / F. ROSARIO	F.S.I. 4500
	DATE SCHEDULED
	4/5/00
CONTRACT #	TYPE OF SYSTEM
5/C008/8	RDD
FEE SERVICE #	P.O. #
CALL AUTHORIZED BY	PHONE / EXT
☑ MAINTENANCE	☐ TEST
☐ JOB COMPLETE	☐ JOB INCOMPLETE
☐ SYSTEM ON LINE	☐ SYSTEM OFF LINE

DEPARTED SHOP	TIME IN	TIME OUT	RETURNED SHOP	TOTAL HOURS
AM / PM	800 AM / PM	430 AM / PM	AM / PM	

MATERIAL RECORD

QUANTITY	DESCRIPTION	COST
	PREVENTIVE MAINTENANCE CONTRACT	

CUSTOMER NAME (PRINT): SILVERSTEIN

CUSTOMER SIGNATURE

SERVICEMAN SIGNATURE

AUTHORIZATION FOR FIRE ALARM INTERRUPTION
The undersigned has been advised by Fire Service Inc. representative that it may be necessary to interrupt the fire protection service by disconnecting the system and/or a component in the performance of their assigned work.
The undersigned hereby assumes the responsibility for the notification of the authorities at the time the interruption is initiated and will take all of the precautions deemed necessary during this period of interruption and hold harmless Fire Service Inc. and its employees regarding interruption of fire protection service during their service of the equipment.

NAME DATE TIME

SERVICE PERFORMED & REMAINING: Preventive Maintenance on Smoke Detection Units (Station Heat (Listed Above). — Floors 45 & 44 — Unit Tests OK / Reset at Fire Panels — to Continue —

(A) INACCESSIBLE (B) MISSING (C) DEFECTIVE (D) OTHER

FIRE SERVICE INCORPORATED

Subsidiary of Firecom, Inc.
39-27 Fifty Ninth Street
Woodside, New York 11377
(718) 899-2311

11770

REPORT OF FIELD SERVICE

LOCATIONS | **DEVICES**

FLOOR		CABLE	XMNR	S/D	TST CLN
47	W. HER D/D	4	069	EDWDS	✓
	W. HER D/D	4	115	EDWDS	✓
	W. HER D/D	4	113	EDWDS	✓
	ELECT G.	4	085	PEC3T	✓
	SECURITY	4	085	PEC3T	✓
	VERTICAL SHAFT	4	068	PEC3T	✓
	ELEV. SHUTTLE Lobby	4	016	PEC3T	✓
	ELECT F	4	061	PEC3T	✓
	ELECT A-B (2)	2	223	BLK	✓
	COMM A-B (2)	2	223	BLK	✓
	ELECT 'C' CLOSET	2	223	BLK	✓
	COMM 'D' CLOSET	2	223	BRK	✓
	STAIN 'B' LANDING	2	221	EDWDS	✓
	CORE HER D/D	2	279	EDWDS	✓
	CORE HER AREA (3)	2	278	PEC3T	✓
46	FREIGHT LOBBY	2	023	BLK	✓
	ELECT G	4	084	PEC3	✓
	SEC. CLOSET	4	084	PEC3	✓
	ELECT B	2	218	BLK	✓
	COMM B	2	218	BLK	X DEFECT.
	ELECT A	2	218	BLK	✓
	COMM A	2	218	BLK	✓
	TELEPH A	2	218	BLK	✓
	TELEPH D	2	219	BLK	✓
	ELECT D	2	219	BLK	✓
	COMM D	2	219	BLK.	✓
	ELEV. SHUTTLE H	4	015	PEC3T	✓
	ELEV. SHUTTLE F.	4	014	PEC3	✓
	CORE HER. D/D (2)	2	277	HONEY	✓
	CORE AREA. (3)	2	276	PEC3T	✓
	ELECT F	4	060	PEC3	✓
	ELECT C	2	219	PEC3	✓
	KITCHEN SHUTTLE ELEV.	4	013	PEC3	✓

INVOICE TO:
2 W.T.C.
N.Y.C.

SERVICEMAN ASSIGNED: J. TORRES / F. ROSARIO	SEE AT JOB SITE: F.S.D.
	DATE SCHEDULED: 4-4-00
CONTRACT #: S/C 00 818	TYPE OF SYSTEM: 850
FEE SERVICE #	P.O. #
CALL AUHTORIZED BY	PHONE / EXT
☒ MAINTENANCE	☒ TEST
☐ JOB COMPLETE	☐ JOB INCOMPLETE
☐ SYSTEM ON LINE	☐ SYSTEM OFF LINE

DEPARTED SHOP	TIME IN	TIME OUT	RETURNED SHOP	TOTAL HOURS
AM PM	800 AM PM	430 AM PM	AM PM	

MATERIAL RECORD

QUANTITY	DESCRIPTION	COST
	PREVENTIVE MAINTENANCE CONTRACT	

CUSTOMER NAME (PRINT): SILVERSTEIN
CUSTOMER SIGNATURE:
SERVICEMAN SIGNATURE:

AUTHORIZATION FOR FIRE ALARM INTERRUPTION
The undersigned has been advised by Fire Service Inc. representative that it may be necessary to interrupt the fire protection service by disconnecting the system and/or a component in the performance of their assigned work.
The undersigned hereby assumes the responsibility for the notification of the authorities at the time the interruption is initiated and will take all of the precautions deemed necessary during this period of interruption and hold harmless Fire Service Inc. and its employees regarding interruption of fire protection service during their service of the equipment.

NAME _____ DATE _____ TIME _____

SERVICE PERFORMED & REMAINING

PREV. MAINTENANCE AS PER SERVICE CONTRACT - CHECKED TESTED SMOKE DETECTORS/UNITS ON ABOVE LISTED FLOORS 47 & 46TH (SOLOMON S.B. PLANS). - SYSTEM CLEARED/RESETED AS PER OPERATION. -

(*) 'B COMM. = S/D. DEFECTIVE/CHECK REPLACE PENDING. -

(A) INACCESSIBLE (B) MISSING (C) DEFECTIVE (D) OTHER

FIRE SERVICE INCORPORATED

Subsidiary of Firecom, Inc.
39-27 Fifty Ninth Street
Woodside, New York 11377
(718) 899-2311

15753

REPORT OF FIELD SERVICE

LOCATIONS | **DEVICES**

INVOICE TO: T.W.T.C.
N.Y.C.

FLOOR	AREA'S		S/D	CABLE	XTNDR	
6	SWITCH GEAR		BRK	1	171	
	"		BRK	1	171	
	"		BRK	1	171	
	"		BRK	1	171	
	"		BRK	1	171	
6	H.V. VAULT	(X4)	BRK	1	171	
	H.V. VAULT	(X4)	BRK	1	171	
	H.V. VAULT	(X4)	BRK	1	171	
	H.V. VAULT	(1)	BRK	1	171	
5	SWITCH GEAR	AREA	BRK	1	170	NORTH
	"	"	BRK	1	170	NORTH
	"	"	BRK	1	170	NORTH
	"	"	BRK	1	170	NORTH
	SWITCH GEAR		BRK	1	170	SOUTH
	"	"	BRK	1	170	SOUTH
	"	"	BRK	1	170	SOUTH
	"	"	BRK	1	170	SOUTH
	H.V. VAULT	AREA	(X6)	1	170	
	H.V. VAULT	AREA	(X6)	1	170	
4	STROBE PANEL	AFL	100	REPAIR (BATTERIES)		

SERVICEMAN ASSIGNED: J. TORRES / F. ROSARIO
SEE AT JOB SITE: F.S.D.
DATE SCHEDULED: 3-29-00
CONTRACT #: SLC00790
TYPE OF SYSTEM: 8500
FEE SERVICE #:
P.O. #:
CALL AUTHORIZED BY:
PHONE:
EXT:

☒ MAINTENANCE ☐ TEST
☐ JOB COMPLETE ☐ JOB INCOMPLETE
☐ SYSTEM ON LINE ☐ SYSTEM OFF LINE

DEPARTED SHOP	TIME IN	TIME OUT	RETURNED SHOP	TOTAL HOURS
8 AM/PM	9 AM/PM	4 AM/PM	AM/PM	

MATERIAL RECORD

QUANTITY	DESCRIPTION	COST
2	BATTERY 12 VOLTS.	

PREVENTIVE MAINTENANCE CONTRACT

CUSTOMER NAME (PRINT): Silverstein
CUSTOMER SIGNATURE: Frances Cassidy
SERVICEMAN SIGNATURE: J. Torres / Frank Rosario

AUTHORIZATION FOR FIRE ALARM INTERRUPTION
The undersigned has been advised by Fire Service Inc. representative that it may be necessary to interrupt the fire protection service by disconnecting the system and/or a component in the performance of their assigned work.
The undersigned hereby assumes the responsibility for the notification of the authorities at the time the interruption is initiated and will take all of the precautions deemed necessary during this period of interruption and hold harmless Fire Service Inc. and its employees regarding interruption of fire protection service during their service of the equipment.

NAME _____ DATE _____ TIME _____

SERVICE PERFORMED & REMAINING

Quarterly Contract - Preventive Maintenance on Smoke Detection Doors 6th / 5th FL (Silverstein) Heat Detectors Doors / Vault. - Repairs on 4th FL. Strobe Panel AFL 100 * Replaced (2) Batteries 12 Volts. Also Back in Operation

(A) INACCESSIBLE (B) MISSING (C) DEFECTIVE (D) OTHER

FIRE SERVICE INCORPORATED

Subsidiary of Firecom, Inc.
39-27 Fifty Ninth Street
Woodside, New York 11377
(718) 899-2311

15751

REPORT OF FIELD SERVICE

LOCATIONS | **DEVICES**

FLOOR	AREA'S			CABLE	XTNDR	S/D.	TST CLEAN
9	ELECT	A		1	179	BRK	✓
	COMM	B		1	179	BLK	✓
	COMM	A		1	179	BRK	✓
	ELECT	B		1	179	BLK	✓
	TELEPH	A		1	179	BLK	✓
	TELEPH	B		1	179	BLK	✓
	PASS	ELECT		1	008	BRK	✓
	FREIGHT	ELECT.		1	008	BRK.	✓
	COMM	C		1	178	BLK	✓
	ELECT	C		1	178	BRK	✓
	TELEPH	C		1	178	BLK	✓
	ELECT	D		1	178	BLK	✓
	COMM	D		1	178	BLK	✓
	TELEPH	D		1	178	BLK	✓
	RETURN	D/D	NORTH	1	238	HOOKUP	✓
	RETURN	D/D	EAST	1	238	HOOKUP	✓
	RETURN	D/D	SOUTH	1	238	HOOKUP	✓
	CORE HOR	D/D.		1	239	HOOKUP	✓
	CORE HOR.	D/D.		1	239	HOOKUP	✓
10	PASS/FREIGHT	ELEV (2)		1	005	BLK	✓
	COMM.	'A'		1	172	BLK.	✓
	ELECT	'A'		1	172	BRK	✓
	TELEPH	'A'		1	172	BLK	✓
	ELECT	'B'		1	172	BLK	✓
	COMM	'B'		1	172	BLK	✓
	TELEPH	'B'		1	172	BLK	✓
	FAN	RM. AREA		1	173	BLK	✓
	FAN	RM. AREA		1	173	BRK	✓
	FAN	RM. AREA		1	173	BLK	✓
	DUCT	S/D. FAN	RM	1	231	HOOKUP	✓
	DUCT	S/D. FAN	RM	1	229	HOOKUP	✓
	DUCT	S/D FAN	RM	1	232	HOOKUP	✓
	DUCT	S/D FAN	RM	1	233	HOOKUP	✓

INVOICE TO: J.W.T.C.
N.Y.C.

SERVICEMAN ASSIGNED	SEE AT JOB SITE
J. TORRES	F.S.D.
F. ROSARIO	DATE SCHEDULED 3-22-00
CONTRACT # S/C00 818	TYPE OF SYSTEM 8500
FEE SERVICE #	P.O. #
CALL AUHTORIZED BY	PHONE / EXT

☐ MAINTENANCE ☐ TEST
☐ JOB COMPLETE ☐ JOB INCOMPLETE
☐ SYSTEM ON LINE ☐ SYSTEM OFF LINE

DEPARTED SHOP	TIME IN	TIME OUT	RETURNED SHOP	TOTAL HOURS
AM PM	800 AM PM	430 AM PM	AM PM	

MATERIAL RECORD

QUANTITY	DESCRIPTION	COST
	PREVENTIVE MAINTENANCE CONTRACT	

CUSTOMER NAME (PRINT)
CUSTOMER SIGNATURE
SERVICEMAN SIGNATURE

AUTHORIZATION FOR FIRE ALARM INTERRUPTION
The undersigned has been advised by Fire Service Inc. representative that it may be necessary to interrupt the fire protection service by disconnecting the system and/or a component in the performance of their assigned work.
The undersigned hereby assumes the responsibility for the notification of the authorities at the time the interruption is initiated and will take all of the precautions deemed necessary during this period of interruption and hold harmless Fire Service Inc. and its employees regarding interruption of fire protection service during their service of the equipment.

TIME
DATE
NAME

SERVICE PERFORMED & REMAINING: Preventive Maintenance on smoke detection system Class-E System on floors 9 & 10th Areas above (listed). — System functioned as designed. —

(A) INACCESSIBLE (B) MISSING (C) DEFECTIVE (D) OTHER

FIRE SERVICE INCORPORATED

Subsidiary of Firecom, Inc.
39-27 Fifty Ninth Street
Woodside, New York 11377
(718) 899-2311

15750

REPORT OF FIELD SERVICE

LOCATIONS | **DEVICES**

FLOOR	AREA'S			CABLE	XTNUM	S/D	TEST
R	ELEV. PASS			1	007	BRK	✓
	FREIGHT ELEV			1	007	BRK	✓
	ELECT	A		1	177	BRK	✓
	COMM	A		1	177	BRK	✓
	TELEPH	A		1	177	BRK	✓
	COMM	B		1	177	BRK	✓
	ELECT	B		1	177	BRK	✓
	TELEPH	B		1	177	BRK	✓
	RETURN D/D	NORTH		1	236	HORIKI	✓
*	RETURN D/D	SOUTH		N/A	—	—	—
	RETURN D/D	EAST (SIDE)		1	236	HORIKI	✓
	CORE MEN D/D			1	237	HORIKI	✓
	CORE MEN D/D			1	237	HORIKI	✓
	COMM	C-D	(2)	1	176	HORIKI	✓
	ELECT	C-D	(2)	1	176	HORIKI	✓
	TELEPH	C-D	(2)	1	176	HORIKI	✓
7	COMM	A		1	175	BRK	✓
	ELECT	A		1	175	BRK	✓
	TELEPH	A		1	175	BRK	✓
	PASS	FREIGHT ELEV		1	006	BLK	✓
	COMM	B		1	175	BRK	✓
	ELECT	B		1	175	BRK	✓
	TELEPH	B		1	175	BLK	✓
	COMM	C		1	174	BLK	✓
	ELECT	C		1	174	BLK	✓
	TELEPH	C		1	174	BLK	✓
	TELEPH	D		1	174	BLK	✓
	ELECT	D		1	174	BLK	✓
	COMM	D		1	174	BRK	✓
	CORE MEN D/D			1	235	HORIKI	✓
	CORE MEN D/D			1	235	HORIKI	✓
	RETURN D/D	NORTH		1	234	HORIKI	✓
	RETURN D/D	SOUTH		1	234	HORIKI	✓

INVOICE TO: 7W.T.C.
N.Y.C.

SERVICEMAN ASSIGNED: J. WARREN, F. ROSARIO	SEE AT JOB SITE: F.S.I.
	DATE SCHEDULED: 3-21-00
CONTRACT #: S/C 00 818	TYPE OF SYSTEM: 8500
FEE SERVICE #	P.O. #
CALL AUHTORIZED BY	PHONE / EXT

☑ MAINTENANCE ☑ TEST
☐ JOB COMPLETE ☐ JOB INCOMPLETE
☐ SYSTEM ON LINE ☐ SYSTEM OFF LINE

DEPARTED SHOP	TIME IN	TIME OUT	RETURNED SHOP	TOTAL HOURS
AM PM	8:00 AM PM	4:30 AM PM	AM PM	

MATERIAL RECORD

QUANTITY	DESCRIPTION	COST
	PREVENTIVE MAINTENANCE CONTRACT	

CUSTOMER NAME (PRINT): Sean O'Keeffe
CUSTOMER SIGNATURE
SERVICEMAN SIGNATURE: J. Warren F. Rosario

AUTHORIZATION FOR FIRE ALARM INTERRUPTION
The undersigned has been advised by Fire Service Inc. representative that it may be necessary to interrupt the fire protection service by disconnecting the system and/or a component in the performance of their assigned work.
The undersigned hereby assumes the responsibility for the notification of the authorities at the time the interruption is initiated and will take all of the precautions deemed necessary during this period of interruption and hold harmless Fire Service Inc. and its employees regarding interruption of fire protection service during their service of the equipment.

TIME _____ DATE _____ NAME _____

SERVICE PERFORMED & REMAINING

Continuing Scheduled Preventive Maintenance On Smoke Alarm Detectors Floors 7 & 8 (Listed Above). - Systems Ack/Reset Properly. -

* NOTE: 8th Fl. Return Unit South Side Unavailable / No Locate. -

(A) INACCESSIBLE (B) MISSING (C) DEFECTIVE (D) OTHER

- - - By Original Request. -

FIRE SERVICE INCORPORATED

Subsidiary of Firecom, Inc.
39-27 Fifty Ninth Street
Woodside, New York 11377
(718) 899-2311

15749

REPORT OF FIELD SERVICE

LOCATIONS | **DEVICES**

INVOICE TO: T.W.T.C. N.Y.C.

FLOOR	AREA			CABLE	ZONE	S/D	TEST/CLEAN
11TH	COMM A			1	182	BLK	✓
	ELECT A			1	182	BLK	✓
	TELEPH A			1	182	BLK	✓
	PASS ELEV			1	010	BLK	✓
	COMM B			1	182	BLK	✓
	ELECT B			1	182	BLK	✓
	TELEPH B			1	182	BLK	✓
	FREIGHT ELEV			1	010	BLK	✓
	RETURN DUCT SOUTH			1	244	HORIZ	✓
	RETURN DUCT NORTH			1	241	HORIZ	✓
	CORE HEAT DUCT			1	243	HORIZ	✓
	CORE HEAT DUCT			1	243	HORIZ	✓
	ELECT C			1	183	BLK	✓
	COMM C			1	183	BLK	✓
	TELEPH C			1	183	BLK	✓
	TELEPH D			1	183	BLK	✓
	ELECT D			1	183	BLK	✓
	COMM D			1	183	BLK	✓
10TH	PASS/FREIGHT (2)			1	009	BLK	✓
	ELECT A-B (2)			1	181	BLK	✓
	TELEPH A-B (2)			1	181	BLK	✓
	COMM A-B (2)			1	181	BLK	✓
	CORE HEAT DUCT			1	241	HORIZ	✓
	CORE HEAT DUCT			1	241	HORIZ	✓
	RETURN DUCT NORTH			1	240	HORIZ	✓
	RETURN DUCT SOUTH			1	240	HORIZ	✓
	RETURN DUCT EAST			1	240	HORIZ	✓
	ELECT C-D (2)			1	180	HORIZ	✓
	COMM C-D (2)			1	180	HORIZ	✓
	TELEPH C-D (2)			1	180	HORIZ	✓

SERVICEMAN ASSIGNED: J. TORRES, F. TORRALBA
SEE AT JOB SITE: F.S.I.
DATE SCHEDULED: 3-15-00
CONTRACT #: SC00818
TYPE OF SYSTEM: 8500
FEE SERVICE #:
P.O. #:
CALL AUTHORIZED BY:
PHONE:
EXT:

☑ MAINTENANCE ☑ TEST
☐ JOB COMPLETE ☐ JOB INCOMPLETE
☐ SYSTEM ON LINE ☐ SYSTEM OFF LINE

DEPARTED SHOP	TIME IN	TIME OUT	RETURNED SHOP	TOTAL HOURS
AM PM	8:00 AM PM	4:30 AM PM	AM PM	

MATERIAL RECORD

QUANTITY	DESCRIPTION	COST
	PREVENTIVE MAINTENANCE CONTRACT	

CUSTOMER NAME (PRINT): [illegible]
CUSTOMER SIGNATURE: [illegible]
SERVICEMAN SIGNATURE: J. Torres, F. Torralba

AUTHORIZATION FOR FIRE ALARM INTERRUPTION
The undersigned has been advised by Fire Service Inc. representative that it may be necessary to interrupt the fire protection service by disconnecting the system and/or a component in the performance of their assigned work.
The undersigned hereby assumes the responsibility for the notification of the authorities at the time the interruption is initiated and will take all of the precautions deemed necessary during the period of interruption and hold harmless Fire Service Inc. and its employees regarding interruption of fire protection service during this service of the equipment.

NAME _____ DATE _____ TIME _____

SERVICE PERFORMED & REMAINING: Routine Fire Maintenance as per Contract. Test (Phone) Smoke Detectors (Unit on Floors (Listed) Floors 11TH & 10TH Systems Left Operating Back to Operation

(A) INACCESSIBLE (B) MISSING (C) DEFECTIVE (D) OTHER

FIRE SERVICE INCORPORATED

Subsidiary of Firecom, Inc.
39-27 Fifty Ninth Street
Woodside, New York 11377
(718) 899-2311

15748

REPORT OF FIELD SERVICE

LOCATIONS | **DEVICES**

FLOOR	AREA'S			CABLE	VINYL	S/D	TEST/CLEAN
13	COMM	A-B	(2)	1	186	BLK	✓
	ELECT	A-B	(2)	1	186	BLK	✓
	TELEPH	A-B	(2)	1	186	BLK	✓
	PASS	FREIGHT	(2)	1(012)	012	BLK	✓
	CORE	HER D/D		1	247	HORIZ	✓
	CORE	HER D/D		1	247	HORIZ	✓
	ELECT	C		1	187	BLK	✓
	COMM	C		1	187	BLK	✓
	TELEPH	C		1	187	BLK	✓
	RETURN	D/D	NORTH	1	246	HORIZ	✓
	RETURN	D/D	SOUTH	1	246	HORIZ	✓
	COMM	D		1	187	BLK	✓
	TELEPH	D		1	187	BLK	✓
	ELECTRIC	D		1	187	BLK	✓
12	PASS	LOBBY		1	011	BLK	✓
*	COMM	A	(CORE 4/4)	1	184	BLK	✓
	ELECT	A		1	184	BLK	✓
	TELEPH	A		1	184	BLK	✓
	FREIGHT	ELEV		1	011	BLK	✓
	COMM	B		1	184	BLK	✓
	ELECT	B		1	184	BLK	✓
	TELEPH	B		1	184	BLK	✓
*	CORE	HER D/D	(LED)	1	245	HORIZ	✓
*	CORE	HER D/D	(LED)	1	245	HORIZ	✓
	RETURN	RETURN D/D	N	1	244	HORIZ	✓
	RETURN	RETURN D/D	S	1	244	HORIZ	✓
	COMM	'C'		1	185	BLK	✓
	ELECT	'C'		1	185	BLK	✓
	TELEPH	'C'		1	185	BLK	✓
	COMM	'D'		1	185	BLK	✓
	ELECT	'D'		1	185	BLK	✓
	TELEPH	'D'		1	185	BLK	✓

INVOICE TO:
2 W.T.C.
N.Y.C.

SERVICEMAN ASSIGNED: J. TORRES / F. ROSARIO	SEE AT JOB SITE: F.S.D.
	DATE SCHEDULED: 3-14-00
CONTRACT #: SF<00818	TYPE OF SYSTEM: 8500
FEE SERVICE #	P.O. #: 3-14-00
CALL AUHTORIZED BY	PHONE / EXT

☒ MAINTENANCE ☐ TEST
☐ JOB COMPLETE ☐ JOB INCOMPLETE
☐ SYSTEM ON LINE ☐ SYSTEM OFF LINE

DEPARTED SHOP	TIME IN	TIME OUT	RETURNED SHOP	TOTAL HOURS
AM / PM	8:00 AM / PM	4:20 AM / PM	AM / PM	

MATERIAL RECORD

QUANTITY	DESCRIPTION	COST
	PREVENTIVE MAINTENANCE CONTRACT	

CUSTOMER NAME (PRINT): SILVERSTEIN
CUSTOMER SIGNATURE
SERVICEMAN SIGNATURE

AUTHORIZATION FOR FIRE ALARM INTERRUPTION
The undersigned has been advised by Fire Service Inc. representative that it may be necessary to interrupt the fire protection service by disconnecting the system and/or a component in the performance of their assigned work.
The undersigned hereby assumes the responsibility for the notification of the authorities at the time the interruption is initiated and will take all of the precautions deemed necessary during this period of interruption and hold harmless Fire Service Inc. and its employees regarding interruption of fire protection service during their service of the equipment.

NAME _____ DATE _____ TIME _____

SERVICE PERFORMED & REMAINING

Courtesy Service Contract Rec'd. Preventive Maintenance on Class E System - Smoke Detectors Tested/Cleaned on Floors 13/12 Above Listed. -

NOTE: CORE HER D/D 'LED' - N/G Need to Replace. 'A' Comm. closet - Unit Card N/G to be

(A) INACCESSIBLE (B) MISSING (C) DEFECTIVE (D) OTHER

FIRE SERVICE INCORPORATED

Subsidiary of Firecom, Inc.
39-27 Fifty Ninth Street
Woodside, New York 11377
(718) 899-2311

15746

REPORT OF FIELD SERVICE

LOCATIONS			DEVICES				
FLOOR				CABLE	XTNDR	S/D	TST Clean
15	COMM	A		1	190	BLK	✓
	ELECT	A		1	190	BLK	✓
	TELEPH	A		1	190	BLK	✓
	COMM	B		1	190	BLK	✓
	ELECT	B		1	190	BLK	✓
	TELEPH	B		1	190	BLK	✓
	PASS	FREIGHT	(2)	1	014	BLK	✓
(A)	CORE	HER	D/D	1	251	HOLT	✓ LED
	CORE	HER	D/D	1	251	HOLT	✓
	RETURN	HENRY	D/D	1	250	HOLT	✓
(*)	RETURN	SOUTH	NO ACCESS			U/N	*
(*)	COMM	C-D	(2)	1	191	BLK	✓
	ELECT	C-D	(2)	1	191	BLK	✓
	TELEPH	C-D	(2)	1	191	BLK	✓
(*)	D COMM. CLOSET		NO ACCESS/FURNITURE				
14	PASS	FREIGHT	(2)	1	013	BLK	✓
	COMM	A		1	188	BLK	✓
	ELECT	A		1	188	BLK	✓
	TELEPH	A		1	188	BLK	✓
	TELEPH	B		1	189	BLK	✓
	COMM	B		1	189	BLK	✓
	ELECT	B		1	189	BLK	✓
	CORE	HER	D/D	1	249	HOLT	✓
	CORE	HER	D/D	1	249	HOLT	✓
	RETURN	D/D		1	248	HOLT	✓
(*)	RETURN	D/D North	NO ACCESS				*
	COMM	C		1	189	BLK	✓
	ELECT	C		1	189	BLK	✓
	TELEPH	C		1	189	BLK	✓
	ELECT	D		1	189	BLK	✓
	TELEPH	D		1	189	BLK	✓
	COMM	D		1	189	BLK	✓
18	TELCOM	RM		1	198	EDWIN	✓
18	TELCOM	D/D	FAN	1	108	DIB-3	✓

INVOICE TO: T.W.T.C. N.Y.C.

SERVICEMAN ASSIGNED	SEE AT JOB SITE
J. JONES / F. ROSARIO	F.S.I.
DATE SCHEDULED	3-8-00
CONTRACT #	S/C00818
TYPE OF SYSTEM	8500
FEE SERVICE #	P.O. #
CALL AUHTORIZED BY	PHONE / EXT

☒ MAINTENANCE ☒ TEST
☐ JOB COMPLETE ☐ JOB INCOMPLETE
☐ SYSTEM ON LINE ☐ SYSTEM OFF LINE

DEPARTED SHOP	TIME IN	TIME OUT	RETURNED SHOP	TOTAL HOURS
AM PM	8:50 AM PM	4:30 PM	AM PM	

MATERIAL RECORD

QUANTITY	DESCRIPTION	COST
	PREVENTIVE MAINTENANCE CONTRACT	

CUSTOMER NAME (PRINT) SILVERSTEIN
CUSTOMER SIGNATURE
SERVICEMAN SIGNATURE

AUTHORIZATION FOR FIRE ALARM INTERRUPTION
The undersigned has been advised by Fire Service Inc. representative that it may be necessary to interrupt the fire protection service by disconnecting the system and/or a component in the performance of their assigned work.
The undersigned hereby assumes the responsibility for the notification of the authorities at the time the interruption is initiated and will take all of the precautions deemed necessary during this period of interruption and hold harmless Fire Service Inc. and its employees regarding interruption of fire protection service during their service of the equipment.

NAME DATE TIME

SERVICE PERFORMED & REMAINING: CONTINUE S/CONTRACT - PREV. MAINTENANCE INSPECTION 15/14 FLOORS (see above).

* NOTE: 15TH FL. 'D' COMM. CLOSET = NO ACCESS DOOR BLOCKED FURNITURE IN WAY.
* CORE HER D/D. L.E.D. TO BE REPLACE / DAMAGED - 15TH FL.
* RETURN DUCTS/DETECTOR (AS PREVIOUS REPORTS) NO ACCESS - SOLID CEILING 15th FL

(A) INACCESSIBLE (B) MISSING (C) DEFECTIVE (D) OTHER

* 14TH FL. RETURN DUCTS/DETECTOR AS PREVIOUS REPORTS) NO ACCESS (SOLID CEILING) NORTH SIDE

FIRE SERVICE INCORPORATED

Subsidiary of Firecom, Inc.
39-27 Fifty Ninth Street
Woodside, New York 11377
(718) 899-2311

15747

REPORT OF FIELD SERVICE

LOCATIONS			DEVICES				
FLOOR	ADD'L			CODE	XMTR	S/D	TST/Clean
17	COMM	A-B	(2)	1	197	BLK	✓✓
	ELECT	A-B	(2)	1	197	BLK	✓✓
	TELEPH	A-B	(2)	1	197	BLK	✓✓
	PASS ELEV			1	016	BLK	✓✓
	FREIGHT ELEV			1	016	BLK	✓✓
	CORE HEAT	D/D		1	256	HOOK	✓
	CORE HEAT	D/D		1	256	HOOK	✓
(*)	RETURN PLENUM	D/D	NO ACCESS				CLOSE
	ELECT	C-D	(2)	1	196	BLK	✓✓
	COMM	C-D	(2)	1	196	BLK	✓✓
	TELEPH	C-D	(2)	1	196	BLK	✓✓
16	COMM	A-B	(2)	1	193	BLK	✓✓
	ELECT	A-B	(2)	1	193	BLK	✓✓
	TELEPH	A-B	(2)	1	193	BLK	✓✓
	TELEPH	C-D	(2)	1	194	BLK	✓✓
	ELECT	C-D	(2)	1	194	BLK	✓✓
	COMM	C-D	(2)	1	194	BLK	✓✓
	PASS ELEV			1	015	BLK	✓
	FREIGHT ELEV			1	015	BLK	✓
	CORE HEAT	D/D		1	253	HOOK	✓
	CORE HEAT	D/D		1	253	HOOK	✓
	PLENUM RETURN	D/D		1	252	HOOK	✓
(*)	" RETURN	SOUTH	NO ACCESS				UNAVAILABLE

PREVENTIVE MAINTENANCE CONTRACT

INVOICE TO: W.T.C. N.Y.C

SERVICEMAN ASSIGNED: J. BARES / F. COSALO

SEE AT JOB SITE: F.I.D

DATE SCHEDULED: 3-7-00

CONTRACT #: S/C00818

TYPE OF SYSTEM: 8500

FEE SERVICE #:

P.O. #:

CALL AUHTORIZED BY | PHONE | EXT

☒ MAINTENANCE ☒ TEST

☐ JOB COMPLETE ☐ JOB INCOMPLETE

☐ SYSTEM ON LINE ☐ SYSTEM OFF LINE

DEPARTED SHOP	TIME IN	TIME OUT	RETURNED SHOP	TOTAL HOURS
AM PM	800 AM PM	430 AM PM	AM PM	

MATERIAL RECORD

QUANTITY	DESCRIPTION	COST

CUSTOMER NAME (PRINT): SILVERSTEIN

CUSTOMER SIGNATURE

SERVICEMAN SIGNATURE

AUTHORIZATION FOR FIRE ALARM INTERRUPTION
The undersigned has been advised by Fire Service Inc. representative that it may be necessary to interrupt the fire protection service by disconnecting the system and/or a component in the performance of their assigned work.
The undersigned hereby assumes the responsibility for the notification of the authorities at the time the interruption is initiated and will take all of the precautions deemed necessary during this period of interruption and hold harmless Fire Service Inc. and its employees regarding interruption of fire protection service during their service of the equipment.

TIME / DATE / NAME

SERVICE PERFORMED & REMAINING

CONTINUE S/CONTRACT PREV. MAINTENANCE ON FLOORS 17° 16 (AS LISTED)

NOTE: 17TH FL. RETURN DUCTS DET. UNAVAILABLE / NO ACCESS. CEILINGS

16TH RETURN D/D SOUTH SIDE NO ACCESS PROVIDED AS REQUESTED

(A) INACCESSIBLE (B) MISSING (C) DEFECTIVE (D) OTHER

FIRE SERVICE INCORPORATED

Subsidiary of Firecom, Inc.
39-27 Fifty Ninth Street
Woodside, New York 11377
(718) 899-2311

15722

REPORT OF FIELD SERVICE

LOCATIONS | **DEVICES**

INVOICE TO: W.T.C
N.Y.C.

FLOOR	AREA'S	ELEV.		CABLE	XTN'D'R	S/D	TEST & CLEAN
19	ELECT	B		1	201	BLK	✓
	COMM	B		1	201	BLK	✓
	TELEPH	B		1	201	BLK	✓
	PASS	FREIGHT	ELEV.	1	018	BLK	✓
	ELECT	A		1	201	BLK	✓
	COMM	A		1	201	BLK	✓
	TELEPH	A		1	201	BLK	✓
	RETURN	D/D	NORTH	1	259	HOFFMAN	✓
	RETURN	D/D	SOUTH	1	259	HOFFMAN	✓
	CORE/	HER	SUPPLY	1	260	HOFFMAN	✓
	CORE/	HER	SUPPLY	1	260	HOFFMAN	✓
	ELECT	C-D	(2)	1	200	BRK	✓
	COMM	C-D	(2)	1	200	BLK	✓
	TELEPH	C-D	(2)	1	200	BLK	✓
18	COMM	A-B	(2)	1	197	BLK	✓
	ELECT	A-B	(2)	1	197	BLK	✓
	TELEPH	A-B	(2)	1	197	BLK	✓
⊛	PASS	FREIGHT	ELEV.	(2) 1	016	BLK	✓
	COMM	C-D	(2)	1	196	BLK	✓
	ELECT	C-D	(2)	1	196	BLK	✓
	TELEPH	C-D	(2)	1	196	BLK	✓
⊛	FREIGHT 18 FL. ELEV. 166y S/D UNIT. (DEFECTIVE HOSE REPLACED)						

PREVENTIVE MAINTENANCE CONTRACT

SERVICEMAN ASSIGNED: J. JONES / L. ROSARIO
SEE AT JOB SITE: T.J.
DATE SCHEDULED: 3-1-00
CONTRACT #: S/C00818
TYPE OF SYSTEM: 8700
FEE SERVICE #:
P.O #:
CALL AUHTORIZED BY:
PHONE:
EXT:

☒ MAINTENANCE ☒ TEST
☒ JOB COMPLETE ☐ JOB INCOMPLETE
☐ SYSTEM ON LINE ☐ SYSTEM OFF LINE

DEPARTED SHOP	TIME IN	TIME OUT	RETURNED SHOP	TOTAL HOURS
AM PM	800 AM PM	430 PM	AM PM	

MATERIAL RECORD

QUANTITY	DESCRIPTION	COST

CUSTOMER NAME (PRINT): SILVERSTEIN
CUSTOMER SIGNATURE:
SERVICEMAN SIGNATURE: J. Jones / L. Rosario

AUTHORIZATION FOR FIRE ALARM INTERRUPTION
The undersigned has been advised by Fire Service Inc. representative that it may be necessary to interrupt the fire protection service by disconnecting the system and/or a component in the performance of their assigned work.
The undersigned hereby assumes the responsibility for the notification of the authorities at the time the interruption is initiated and will take all of the precautions deemed necessary during the period of interruption and hold harmless Fire Service Inc. and its employees regarding interruption of the protection service during their service of the equipment.

NAME _____ DATE _____ TIME _____

SERVICE PERFORMED & REMAINING

CONTINUE S/C. PREVENTIVE MAINTENANCE ON FLOORS 19 & 18TH (26 UNITS) UNITS TEST/CLEANED — ALARMS (2) RESET. FUNCTIONAL OUTPUTS O.K. — SYSTEM RESET — BACK TO OPERATING. —

⊛ NOTE: 18TH FL FREIGHT 166Y S/D HOSE REPLACED. — TO FOLLOW UP. —

(A) INACCESSIBLE (B) MISSING (C) DEFECTIVE (D) OTHER

FIRE SERVICE INCORPORATED

88032

SUBSIDIARY OF FIF[illegible]M INC.

39-27 FIFTY NINTH STREET
WOODSIDE, NEW YORK 11377
(718) 899-2311

REPORT OF FIELD SERVICE

INVOICE TO

SERVICED

Silverstein.
7 W TC
Emergency Service.

SATURDAY

CALL AUTHORIZED BY	CONTRACT #	FEE SERVICE #	FJ #	P O #	SEE AT JOB SITE
Service.					Slo Lawrence

PHONE	EXT	DATE SCHEDULED	TIME SCHEDULED	SERVICEMAN ASSIGNED
		15 JANUARY 2000		Newell

MATERIAL RECORD

QUANTITY ISSUED	QUANTITY B/O	F C I NO	DESCRIPTION	UNIT PRICE	PER	TOTAL AMOUNT
			TROUBLE CALL			
			BILLABLE			
			Construction			
			CONTRACT TROUBLE CALL			

CHECK APPROPRIATE BOX

- ☐ Q C
- ☐ I & T
- ☐ FEE CALL
- ☐ DELIVERY
- ☐ DEMO
- ☐ EMERGENCY CALL
- ☐ CONTRACT CALL
- ☐ PICK UP
- ☐ DEMO OWNER
- ☐ SURVEY

DEPARTED SHOP	TIME IN	TIME OUT	RETURNED SHOP	TOTAL HOURS	START MILEAGE	END MILEAGE	MISC EXPENSE	CAR FARE
200	245	350		1.50				

- ☐ MAT REQD
- ☐ PARTIAL
- ☐ OTHER
- ☐ LABOR REQD

I & T COMPLETE ☐ CALL COMPLETE ☐

SERVICE DATE: 15 JANUARY 2000

WILL RETURN ON:

CUSTOMER SIGNATURE: Leslie Lawrence

SERVICEMAN SIGNATURE: B. C. Newell

AUTHORIZATION FOR FIRE ALARM INTERRUPTION

The undersigned has been advised by Fire Service, Inc. representative that it may be necessary to interrupt the fire protection service by disconnecting the system and/or a component in the performance of their assigned work.

The undersigned hereby assumes the responsibility for the notification of the authorities at the time the interruption is initiated and will take all of the precautions deemed necessary during the period of interruption and hold harmless Fire Service Inc. and its employees regarding interruption of fire protection service during their service of the equipment

Date

Name

PROBLEM—AS DESCRIBED

Emergency Service.

SERVICE PERFORMED 200 rcvd beep. Contact service and customer. Customer report 43rd Fl speaker gong in and out of trouble. Floor under construction. 2:45 arrived at Job site. Met with security. Check F.C.S. 43rd Fl speaker in trouble, then trouble reset. Met with Engineer. Access 39th Fl and 42nd Fl. Construction floors gutted. Speaker open and grounded circuit disconnected grounded field wire 41st Fl and 43rd Fl, to stabilized F.C.S. Checked F.C.S. -ok speaker in trouble 40-43. Can completed.

WORK REMAINING

* Must clear grounded speakers 41st and 43rd Fl

FCI 155
REV 6186

FIRE SERVICE INCORPORATED

88043

SUBSIDIARY OF F. COM INC.
39-27 FIFTY NINTH STREET
WOODSIDE, NEW YORK 11377
(718) 899-2311

REPORT OF FIELD SERVICE

INVOICE TO

SERVICED
7 WORLD TRADE CENTER
NEW YORK, N.Y

CALL AUTHORIZED BY		CONTRACT #	FEE SERVICE #	FJ #	P.O. #	SEE AT JOB SITE
		SC-00818				
PHONE	EXT	DATE SCHEDULED	TIME SCHEDULED			SERVICEMAN ASSIGNED
		1-17-00				T. TRONCOSO

MATERIAL RECORD

QUANTITY ISSUED	QUANTITY B/O	FCI NO	DESCRIPTION	UNIT PRICE	PER	TOTAL AMOUNT
2			12VDC/7AH BATTS	6.95		

TROUBLE CALL

AUTHORIZATION FOR FIRE ALARM INTERRUPTION

The undersigned has been advised by Fire Service, Inc. representative that it may be necessary to interrupt the fire protection service by disconnecting the system and/or a component in the performance of their assigned work.

The undersigned hereby assumes the responsibility for the notification of the authorities at the time the interruption is initiated and will take all of the precautions deemed necessary during this period of interruption and hold harmless Fire Service Inc. and its employees regarding interruption of fire protection service during their service of the equipment.

Date

Name

CHECK APPROPRIATE BOX

- ☐ Q.C
- ☐ I&T
- ☐ FEE CALL
- ☐ DELIVERY
- ☐ DEMO
- ☐ EMERGENCY CALL
- ☑ CONTRACT CALL
- ☐ PICK UP
- ☐ DEMO OWNER
- ☐ SURVEY

DEPARTED SHOP	TIME IN	TIME OUT	RETURNED SHOP	TOTAL HOURS	START MILEAGE	END MILEAGE	MISC EXPENSE	CAR FARE
12:30 PM	1:30 PM	2:00 PM		1.5				

☐ MAT REQD ☐ PARTIAL ☐ OTHER ☐ LABOR REQD

SERVICE DATE: 1-17-00

CUSTOMER SIGNATURE: Sean O'Keef

I&T COMPLETE ☐ CALL COMPLETE ☑

WILL RETURN ON

SERVICEMAN SIGNATURE: T. Troncoso

PROBLEM—AS DESCRIBED

TROUBLE CALL

SERVICE PERFORMED

REPLACE TWO 12VDC/7AH BATTS. IN AFC-100 STROBE PANEL 20TH FL. MER. ROOM.
PANEL BACK ON LINE.

WORK REMAINING

JOB DONE.

FCI 155
REV 6186

FIRE SERVICE INCORPORATED

: 21937

Subsidiary of Firecom, Inc.
39-27 Fifty Ninth Street
Woodside, New York 11377
(718) 899-2311

REPORT OF FIELD SERVICE

LOCATIONS	DEVICES
FLOOR	
6	STROBE PANEL ACTIVATION (1) AFC 100 - B COMM. - (1) STROBE - 5 SPKRS.
3RD	STROBE PNL ACTIVATION (1) AFC 100 B COMM. - STROBES = 10 UNITS
2ND	STROBE PANEL ACTIVATION (1) AFC 100 FREIGHT/ENTRANCE AREA - STROBES = 6 UNITS
1ST	STROBE PANEL ACTIVATION (1) AFC 100 PUMP ROOM - STROBES = 2 UNITS. -
* 26	STROBE PANEL PYRO SYSTM 3 CORE HEA TNUSSE / NEED (2) BATTERY 6 VOLTS (LOW OUTPUT
* 12	REPAIRED (1) AFC 101 PANEL - REPLACED (1) BATTERY 12 VOLTS - (LOW OUTPUT) - B' COMM. CLOSET
* 11	REPAIRED (1) AFC 101 PANEL & (1) BATTERY REPLACED LEADING UNIT / DEFECTIVE - 'B' COMM. CLOSET -
16	REPAIRED (1) AFC 100 PANEL - A' CKT OUT CHECK / RESISTANCE - O.K. - BACK TO OPERATIONS -

INVOICE TO: 7 WTC.
N.Y.C.

SERVICEMAN ASSIGNED	SEE AT JOB SITE
L. TORRES / F. ROSARIO	DATE SCHEDULED 1-12 DE
CONTRACT # S/C 00 813	TYPE OF SYSTEM 3500
FEE SERVICE #	P.O. #
CALL AUTHORIZED BY	PHONE / EXT

☑ MAINTENANCE ☑ TEST
☐ JOB COMPLETE ☐ JOB INCOMPLETE
☐ SYSTEM ON LINE ☐ SYSTEM OFF LINE

DEPARTED SHOP	TIME IN	TIME OUT	RETURNED SHOP	TOTAL HOURS
AM PM	901 AM	430 PM	AM PM	

MATERIAL RECORD

QUANTITY	DESCRIPTION	COST
2	BATTERIES 12VOLT	6995 each

PREVENTIVE MAINTENANCE CONTRACT

CUSTOMER NAME (PRINT) DIVERSTEIN
CUSTOMER SIGNATURE
SERVICEMAN SIGNATURE

NAME DATE TIME

AUTHORIZATION FOR LINE ALARM INTERRUPTION
The undersigned has been advised by Fire Service Inc. representative that it may be necessary to interrupt the fire protection service by disconnecting the system under a component in the performance of this assigned work.
The undersigned hereby assumes the responsibility for the installation of the notification at the time the interruption is initiated and will take all of the precautions described necessary during the period of interruption and hold harmless Fire Service Inc. and its employees regarding interruption of the protection service during that portion of the equipment.

SERVICE PERFORMED & REMAINING

(A) per contract check tests) strobes panels (light in floor) (A) (as listed) - (also repaired) replaced (1) battery unit in 12 floor (and) (1) unit batteries in 11th (low output) leading unit - (A) 26th pl panel pyro strobe needed (2) units - pending -

(A) INACCESSIBLE (B) MISSING (C) DEFECTIVE (D) OTHER

FIRE SERVICE INCORPORATED

70080 D11/99

SUBSIDIARY OF F... COM INC
39-27 FIFTY NINTH STREET
WOODSIDE, NEW YORK 11377
(718) 899-2311

REPORT OF FIELD SERVICE

INVOICE TO

SERVICED
4 WTC
NY NY

CALL AUTHORIZED BY	CONTRACT #	FEE SERVICE #	F.O.#	P.O.#	SEE AT JOB SITE
P. Iniviglio	Sch C/E/E				F.S.D
PHONE / EXT	DATE SCHEDULED	TIME SCHEDULED			SERVICEMAN ASSIGNED
	10/13/99	AM			L. Tabor

MATERIAL RECORD

QUANTITY ISSUED	QUANTITY B/O	FCI NO	DESCRIPTION	UNIT PRICE	PER	TOTAL AMOUNT
2.			BATTERIES 12 VOL	69.95		

PREVENTIVE MAINTENANCE CONTRACT

CHECK APPROPRIATE BOX

- ☐ O.C
- ☐ I&T
- ☐ FEE CALL
- ☐ DELIVERY
- ☐ DEMO
- ☐ EMERGENCY CALL
- ☒ CONTRACT CALL
- ☐ PICK UP
- ☐ DEMO OWNER
- ☐ SURVEY

DEPARTED SHOP	TIME IN	TIME OUT	RETURNED SHOP	TOTAL HOURS	START MILEAGE	END MILEAGE	MISC EXPENSE	CAB FARE
8:00 AM	9:00 AM	4:30 PM		5:00				

☐ PART REQD ☐ PARTIAL ☐ OTHER ☐ LABOR REQD

SERVICE DATE: 10/13/99

CUSTOMER SIGNATURE: Sean O'Keeffe

I&T COMPLETE ☐ CALL COMPLETE ☐

WILL RECEIPT ON

SERVICEMAN SIGNATURE: L. Tabor

PROBLEM—AS DESCRIBED

Preventive Maintenance

SERVICE PERFORMED

Cleaned and tested Sensitivity of smoke detector on 2nd and 3rd floor Areas Closets Elevator Lobbys All detector tested Work OK. Also. Repairs on The 45th floor Strobe Panel NOTE OFFICIAL TO WTC. Four Batteries for Replacement on Strobe panel

WORK REMAINING

AUTHORIZATION FOR FIRE ALARM INTERRUPTION

The undersigned has been advised by Fire Service Inc. representative that it may be necessary to interrupt the fire protection service by disconnecting the system and/or a component in the performance of their assigned work.

The undersigned hereby assumes the responsibility for the notification of the authorities at the time the interruption is initiated and will take all of the precautions deemed necessary during the period of interruption and hold "Simplex Fire Service Inc. and its employees regarding interruption of fire protection service during their service of the equipment

Date

X

Name

FCI 155
REV 6196

FIRE SERVICE INCORPORATED

89235

SUBSIDIARY OF FIR. JM INC.
39-27 FIFTY NINTH STREET
WOODSIDE, NEW YORK 11377
(718) 899-2311

REPORT OF FIELD SERVICE

INVOICE TO

SERVICED
7 W.T.C
NEW YORK . N.Y

CALL AUTHORIZED BY	CONTRACT #	FEE SERVICE #	FJ #	PO #	SEE AT JOB SITE
SHOP	U.P.S = 3/8				ASAP
PHONE / **EXT.**	**DATE SCHEDULED**	**TIME SCHEDULED**			**SERVICEMAN ASSIGNED**
	2-23-00	300 AM			C. FORERO

C TAGARES

MATERIAL RECORD

QUANTITY ISSUED	QUANTITY B/O	FCI NO	DESCRIPTION	UNIT PRICE	PER	TOTAL AMOUNT
			PREVENTIVE MAINTENANCE CONTRACT			

AUTHORIZATION FOR FIRE ALARM INTERRUPTION

The undersigned has been advised by Fire Service, Inc. representative that it may be necessary to interrupt the fire protection service by disconnecting the system and/or a component in the performance of their assigned work.

The undersigned hereby assumes the responsibility for the notification of the authorities at the time the interruption is initiated and will take all of the precautions deemed necessary during the period of interruption and hold harmless Fire Service Inc. and its employees regarding mis-function of the protection service during their service of the equipment

Date

Name

CHECK APPROPRIATE BOX

- ☐ Q.C
- ☐ I & T
- ☐ FEE CALL
- ☐ DELIVERY
- ☐ DEMO
- ☐ EMERGENCY CALL
- ☒ CONTRACT CALL
- ☐ PICK UP
- ☐ DEMO OWNER
- ☐ SURVEY

DEPARTED SHOP	TIME IN	TIME OUT	RETURNED SHOP	TOTAL HOURS	START MILEAGE	END MILEAGE	MISC EXPENSE	CAR FARE
	12.30	300	430					
	PM	AM	PM					

- ☐ MAT REQD ☐ PARTIAL
- ☐ OTHER ☐ LABOR REQD

SERVICE DATE: 2-23-00

CUSTOMER SIGNATURE: Tony Rubino

I & T COMPLETE ☐ CALL COMPLETE ☒

WILL RETURN ON

SERVICEMAN SIGNATURE: C. FORERO

PROBLEM—AS DESCRIBED: PREVENTIVE MAINTENANCE / U.P.S System (10 KV)

SERVICE PERFORMED: Cleaned And Checked U.P.S System Took Readings Cleaned Cabinet, Checked 24V Mini Fans All Runing O.K Cleaned Filters And Batteries, (U.P.S it's Operational)

Battery Amps = 2A

Total Battery Voltage 140.9 V. A/C

Output Voltage 6.2 HZ

(Load) L-1 = 11.4

L-2 = 11.1

WORK REMAINING: Output Voltage 250 V

Input Volts 208 V A/C

FCI 155
REV 6186

FIRE SERVICE INCORPORATED

21928

Subsidiary of Firecom, Inc.
39-27 Fifty Ninth Street
Woodside, New York 11377
(718) 899-2311

REPORT OF FIELD SERVICE

LOCATIONS			DEVICES				
FLOOR				S/D	CABLE	X/N DR.	TEST Clean
24	CORE	HER D/D		Hoffman	2	231	✓
	CORE	HER D/D.		Hoffman	2	231	✓
	ELEV. LOBBY			BELK	2	001	✓
	FREIGHT ELEV.			BELK	2	001	✓
	COMM	A		BELK	2	172	✓
	ELECT	A		BELK	2	172	✓
	TELEPH	A		BELK	2	172	✓
	COMM	B		BELK	2	172	✓
	ELECT	B		BELK	2	172	✓
	TELEPH	B		BELK	2	172	✓
	RETURN	D/D	SOUTH	Hoffman	2	230	✓
	RETURN	D/D	NORTH	Hoffman	2	230	✓
	COMM	C		BELK	2	171	✓
	ELECT	C		BELK	2	171	✓
	TELEPH	C		BELK	2	171	✓
	TELEPH	D		BELK	2	171	✓
	ELECT	D		BELK	2	171	✓
	COMM	D		BELK	2	171	✓
22	PASS ELEV.			BELK	1	021	✓
	FREIGHT ELEV.			BELK	1	021	✓
	TELEPH	A		BELK	1	207	✓
	ELECT	A		BELK	1	207	✓
	COMM	A		BELK	1	207	✓
	ELECT	B		BELK	1	207	✓
	COMM	B		BELK	1	207	✓
	TELEPH	B		BELK	1	207	✓
	COMM	C		BELK	1	206	✓
	ELECT	C		BELK	1	206	✓
	TELEPH	C		BELK	1	206	✓
	TELEPH	D		BELK	1	206	✓
	ELECT	D		BELK	1	206	✓
	COMM	D		BELK	1	206	✓
	CORE	HER D/D	(2)	Hoffman	1	264	✓
	RETURN	D/D	(2)	Hoffman	1	265	✓

INVOICE TO: 2 W.T.C.
N.Y.C.

SERVICEMAN ASSIGNED: J. TORRES, F. ROSARIO	SEE AT JOB SITE: F.S.D.
	DATE SCHEDULED: 2-23-00
CONTRACT #: S/C 00 818	TYPE OF SYSTEM: 8500
FEE SERVICE #	P.O. #
CALL AUHTORIZED BY	PHONE / EXT

☒ MAINTENANCE ☒ TEST
☐ JOB COMPLETE ☐ JOB INCOMPLETE
☐ SYSTEM ON LINE ☐ SYSTEM OFF LINE

DEPARTED SHOP	TIME IN	TIME OUT	RETURNED SHOP	TOTAL HOURS
AM / PM	800 AM / PM	430 AM / PM	AM / PM	

MATERIAL RECORD

QUANTITY	DESCRIPTION	COST
	PREVENTIVE MAINTENANCE CONTRACT	

CUSTOMER NAME (PRINT)
CUSTOMER SIGNATURE
SERVICEMAN SIGNATURE

AUTHORIZATION FOR FIRE ALARM INTERRUPTION
The undersigned has been advised by Fire Service Inc. representative that it may be necessary to interrupt the fire protection service by disconnecting the system and/or a component in the performance of their assigned work.
The undersigned hereby assumes the responsibility for the notification of the authorities at the time the interruption is initiated and will take all of the precautions deemed necessary during this period of interruption and hold harmless Fire Service Inc. and its employees regarding interruption of the protection service during their service of the equipment.

TIME
DATE
NAME

SERVICE PERFORMED & REMAINING: Courtesy S/Contract - Test Flashing D Area's Smoke Detectors (Closet's) + H-E-R Duct's S/D. @ Bed Area's Lobbies on Floor (Listed Above). - System Act/Heated Properly. - To Continue. —

(A) INACCESSIBLE (B) MISSING (C) DEFECTIVE (D) OTHER

FIRE SERVICE INCORPORATED

21927

Subsidiary of Firecom, Inc.
39-27 Fifty Ninth Street
Woodside, New York 11377
(718) 899-2311

REPORT OF FIELD SERVICE

LOCATIONS | **DEVICES**

FLOOR	AREAS		S/D	CABK	XTNDR	TST CLEAN
25	COMM A		BRK	2	174	✓
	ELECT A		BRK	2	174	✓
	TELEPH A		BRK	2	174	✓
	ELECT B		BRK	2	174	✓
	COMM B		BRK	2	174	✓
	TELEPH B		BRK	2	174	✓
	PASS ELEV.		BRK	2	002	✓
	FREIGHT ELEV		BRK	2	002	✓
	COMM C		BRK	2	174	✓
	ELECT C		BRK	2	174	✓
	TELEPH C		BRK	2	174	✓
	ELECT D		BRK	2	174	✓
	COMM D		BRK	2	174	✓
	TELEPH D		BRK	2	174	✓
	RETURN D/D	NORTH	HOCHIKI	2	232	✓
	RETURN D/D	SOUTH	HOCHIKI	2	232	✓
	CORE HER D/D		HOCHIKI	2	233	✓
25C	CORE HER D/D		HOCHIKI	2	233	✓

PREVENTIVE MAINTENANCE CONTRACT

INVOICE TO: T.W.T.C
N.Y.C.

SERVICEMAN ASSIGNED: J. TORRES / F. COSARIO	SEE AT JOB SITE: F.S.D.
	DATE SCHEDULED: 2-22-00
CONTRACT #: S/C00818	TYPE OF SYSTEM: 8500
FEE SERVICE #	P.O. #
CALL AUHTORIZED BY	PHONE / EXT

☑ MAINTENANCE ☑ TEST
☐ JOB COMPLETE ☐ JOB INCOMPLETE
☐ SYSTEM ON LINE ☐ SYSTEM OFF LINE

DEPARTED SHOP	TIME IN	TIME OUT	RETURNED SHOP	TOTAL HOURS
AM / PM	800 AM	430 PM	AM / PM	

MATERIAL RECORD

QUANTITY	DESCRIPTION	COST

CUSTOMER NAME (PRINT)
CUSTOMER SIGNATURE
SERVICEMAN SIGNATURE

AUTHORIZATION FOR FIRE ALARM INTERRUPTION
The undersigned has been advised by Fire Service Inc. representative that it may be necessary to interrupt the fire protection service by disconnecting the system and/or a component in the performance of their assigned work.
The undersigned hereby assumes the responsibility for the consequence of this interruption at the time the interruption is initiated and will take all of the precautions deemed necessary during the period of interruption and hold harmless Fire Service Inc. and its employees regarding interruption of the protection service during this service of the equipment.

TIME
DATE
NAME

SERVICE PERFORMED & REMAINING: STARTED YEAR 2000 / FIRST FLOOR CLEANING / TESTING OF SMOKE DETECTORS (BOTH ELEVATOR LOBBIES / TRANSFORMERS - HEAT - DUCTS. - AS LISTED. - CHECK SUBSTATION / ALL KEYS) / BYPASS JUMPERS O.K. - BACK TO NORMAL.

(A) INACCESSIBLE (B) MISSING (C) DEFECTIVE (D) OTHER

FIRE SERVICE INCORPORATED

21926

Subsidiary of Firecom, Inc.
39-27 Fifty Ninth Street
Woodside, New York 11377
(718) 899-2311

REPORT OF FIELD SERVICE

LOCATIONS		DEVICES					
FLOOR				W/STA	CHK	XTNDR	STR PAGE
14	HALLWAY			✓	1	325	✓
	CORE HER			✓	1	325	✓
13							
12	HALLWAY			✓	1	323	✓
	CORE HER			✓	1	323	✓
11	HALLWAY			✓	1	322	✓
	CORE HER			✓	1	322	✓
10	HALLWAY			✓	1	321	✓
	CORE HER			✓	1	321	✓
9	HALLWAY			✓	1	320	✓
	CORE HER			✓	1	320	✓
8	HALLWAY			✓	1	319	✓
	CORE HER			✓	1	319	✓
7	HALLWAY			✓	1	318	✓
	CORE HER			✓	1	318	✓
6	HALLWAY			✓	1	317	✓
6	HER (FAN RM)			✓✓	1	338	✓
6	ENGNRS - RAN II			✓	1	335	✓
5	HALLWAY / SERV. ELEV.			✓	1	336	✓
5	SW GEAR H.V.			✓	1	336	✓
5	HER NORTH			✓	1	337	✓
5	" SOUTH			✓	1	337	✓
5	HER N.W			✓	1	316	
4	'B' EXIT / HALL			✓	1	315	✓
3	F.D. OFF RAN I			✓	1	314	✓
2	'A' EXIT (AREA)			✓	1	313	✓
2	HER WEST			✓	1	334	✓
2	T/FRAME AREA			✓	1	334	✓
1	PUMP RM			✓	1	341	✓
1	GROUND ENTRANCE			X	OUT/SERV.		—

INVOICE TO: W.T.C.
N.Y.C.

SERVICEMAN ASSIGNED	SEE AT JOB SITE
J. JONES / F. ROSARIO	F.I.D.
DATE SCHEDULED	12.18.00
CONTRACT # S/C 00 818	TYPE OF SYSTEM 8500
FEE SERVICE #	P.O. #
CALL AUTHORIZED BY	PHONE / EXT

☐ MAINTENANCE ☑ TEST
☑ JOB COMPLETE ☐ JOB INCOMPLETE
☐ SYSTEM ON LINE ☐ SYSTEM OFF LINE

DEPARTED SHOP	TIME IN	TIME OUT	RETURNED SHOP	TOTAL HOURS
AM PM	8:00 AM PM	3:30 PM	AM PM	

MATERIAL RECORD

QUANTITY	DESCRIPTION	COST
	PREVENTIVE MAINTENANCE CONTRACT	

CUSTOMER NAME (PRINT) SILVERSTEIN
CUSTOMER SIGNATURE
SERVICEMAN SIGNATURE

AUTHORIZATION FOR FIRE ALARM INTERRUPTION
The undersigned has been advised by Fire Service Inc. representative that it may be necessary to interrupt the fire protection service by disconnecting the system and/or a component in the performance of their assigned work.
The undersigned hereby assumes the responsibility for the notification of the authorities at the time the interruption is initiated and will take all of the precautions deemed necessary during this period of interruption and hold harmless Fire Service Inc. and its employees regarding interruption of fire protection service during their service of the equipment.

NAME DATE TIME

SERVICE PERFORMED & REMAINING

PER CONTRACT CHECK / TESTED FOR OPERATION WARDEN'S PHONES STATIONS + SPKR'S PAGE ON FLOOR 14 TO 1ST FL. AS LISTED ABOVE. — (4) GROUND FLOOR ENTRANCE UNIT (DISABLED DUE TO GROUNDED WIRING - AS PREVIOUSLY INFORMED) UNIT-OUT —

(A) INACCESSIBLE (B) MISSING (C) DEFECTIVE (D) OTHER

FIRE SERVICE INCORPORATED

21925

Subsidiary of Firecom, Inc.
39-27 Fifty Ninth Street
Woodside, New York 11377
(718) 899-2311

REPORT OF FIELD SERVICE

LOCATIONS | **DEVICES**

FLOOR				W/STA	SPKR/PAGE	STROBE	
25	HALLWAY			✓	✓	282	
	CORE HER			✓		282	
24	HALLWAY			✓	✓	281	
	CORE HER			✓		281	
23	N/A			NO ACCESS.		—	
22	HALLWAY			✓	✓	333	
	CORE/HER			✓		333	
21	HALLWAY			✓	✓	332	
	CORE HER			✓		332	
* 20	HALLWAY			✓	✓	331	
	CORE HER.	*		✓		331	
*	LOW AUDIBILITY PHASE. —						
19	HALLWAY			✓	✓	330	
	CORE HER			✓		330	
18	HALLWAY			✓	✓	329	
	CORE HER			✓		329	
17	HALLWAY			✓	✓	328	
	CORE HER			✓		328	
* 16	HALLWAY			✓	✓	327	
	CORE HER	*		✓		327	
	LOW AUDIBILITY PHASE. —						
15	HALLWAY			✓	✓	326	
	CORE HER			✓		326	

TO BE CONTINUED.

INVOICE TO: TWTC
NYC

SERVICEMAN ASSIGNED: J. TORRES / F. PUSHKIN	SEE AT JOB SITE: F.I.I.
	DATE SCHEDULED: 2-17-00
CONTRACT #: S/C 00818	TYPE OF SYSTEM: P500
FEE SERVICE #	P.O. #
CALL AUHTORIZED BY	PHONE / EXT

☒ MAINTENANCE ☒ TEST
☒ JOB COMPLETE ☐ JOB INCOMPLETE
☐ SYSTEM ON LINE ☐ SYSTEM OFF LINE

DEPARTED SHOP	TIME IN	TIME OUT	RETURNED SHOP	TOTAL HOURS
800 AM/PM	900 AM/PM	1200 AM/PM	AM/PM	

MATERIAL RECORD

QUANTITY	DESCRIPTION	COST
	PREVENTIVE MAINTENANCE CONTRACT	

CUSTOMER NAME (PRINT): SILVERSTEIN
CUSTOMER SIGNATURE:
SERVICEMAN SIGNATURE: J. Torres / F. Pushkin

AUTHORIZATION FOR FIRE ALARM INTERRUPTION
The undersigned has been advised by Fire Service Inc. representative that it may be necessary to interrupt the fire protection service by disconnecting the system and/or a component in the performance of their assigned work.
The undersigned hereby assumes the responsibility for the notification of the authorities at the time the interruption is initiated and will take all of the precautions deemed necessary during this period of interruption and hold harmless Fire Service Inc. and its employees regarding interruption of fire protection service during their service of the equipment.

NAME _____ DATE _____ TIME _____

SERVICE PERFORMED & REMAINING: AS PER CONTRACT - CHECK TEST FOR OPERATIONS ON WARDEN'S STATIONS AND P.A. PAGE ON FLOOR'S 25 TO 15TH AS LISTED ABOVE FLOORS 20/16 LOW AUDIBILITY ON PHONE JACK INCREASED. TO BE CONTINUED. — ALSO AS PER FINDAY — START REPLACING F.I.I.'S PANELS AT F.C.STA. — TO DELETE POINTS ON (SOLOMON RISER POINTS). — TO BE CONTINUED. —

(A) INACCESSIBLE (B) MISSING (C) DEFECTIVE (D) OTHER

FIRE SERVICE INCORPORATED

21921

Subsidiary of Firecom, Inc.
39-27 Fifty Ninth Street
Woodside, New York 11377
(718) 899-2311

REPORT OF FIELD SERVICE

LOCATIONS | **DEVICES**

FLOOR	EXITS		CABLE	M/STA	TST		
25	A		2	036	✓		
	B		2	037	✓		
24	A		2	034	✓		
	B		2	035	✓		
23	A	ACCESS NEEDED					
	B		4	-	MAYOR'S OFFICE		
22	A		2	070	✓		
	B		2	071	✓		
21	A		-	068	✓		
	B			069	✓		
20	A			066	✓		
	B			067	✓		
19	A			064	✓		
	B			065	✓		
18	A			062	✓		
	B			063	✓		
17	A			060	✓		
	B			061	✓		
16	A			058	✓		
	B			059	✓		
15	A			056	✓		
	B			057	✓		
14	A			054	✓		
	B			055	✓		
13	A			052	✓		
	B			053	✓		
12	A			050	✓		
	B			051	✓		
11	A			048	✓		
	B			049	✓		
10	A			046	✓		
	B			047	✓		

INVOICE TO: J.W.T.C.
N.Y.C.

SERVICEMAN ASSIGNED: J. TORRES / F. ROSARIO
SEE AT JOB SITE: F.S.I.
DATE SCHEDULED: 2-10-00
CONTRACT #: S/C 818
TYPE OF SYSTEM: 850
FEE SERVICE #:
P.O #:
CALL AUHTORIZED BY:
PHONE:
EXT:

☐ MAINTENANCE ☑ TEST
☐ JOB COMPLETE ☐ JOB INCOMPLETE
☐ SYSTEM ON LINE ☐ SYSTEM OFF LINE

DEPARTED SHOP	TIME IN	TIME OUT	RETURNED SHOP	TOTAL HOURS
AM PM	8:00 AM PM	4:30 AM PM	AM PM	

MATERIAL RECORD

QUANTITY	DESCRIPTION	COST
	PREVENTIVE MAINTENANCE CONTRACT	

CUSTOMER NAME (PRINT): SILVERSTEIN
CUSTOMER SIGNATURE: Complete
SERVICEMAN SIGNATURE: J. Torres / Frank Rosario

AUTHORIZATION FOR FIRE ALARM INTERRUPTION
The undersigned has been advised by Fire Service Inc representative that it may be necessary to interrupt the fire protection service by disconnecting the system and/or a component in the performance of their assigned work.
The undersigned hereby assumes the responsibility for the notification of the authorities at the time the interruption is initiated and will take all of the precautions deemed necessary during this period of interruption and hold harmless Fire Service Inc, and its employees regarding interruption of fire protection service during this service of the equipment.

TIME
DATE
NAME

SERVICE PERFORMED & REMAINING: Contact S/C. CHECK TESTED FOR PROPER OPERATION MANUAL PULL STATIONS (As LISTED) FLOOR 25 TO 10th. - SMOKE DETECTORS / HEAT DETECTORS FUNCTIONS O.K. - TO BE CONTINUE. -

(A) INACCESSIBLE (B) MISSING (C) DEFECTIVE (D) OTHER

FIRE SERVICE INCORPORATED

Subsidiary of Firecom, Inc.
39-27 Fifty Ninth Street
Woodside, New York 11377
(718) 899-2311

15721

REPORT OF FIELD SERVICE

LOCATIONS | **DEVICES**

FLOOR	AREA	LOCATION		S/D	CABLE	XT/NDR	TST/CLEAN
21	PASS	ELEV		BLK	1	020	✓
	FREIGHT	ELEV		EDWDS	1	020	✓
	COMM	A		BLK	1	204	✓
	ELECT	A		BLK	1	204	✓
	TELEPH	A		BLK	1	204	✓
	ELECT	B		BLK	1	204	✓
	COMM	B		BLK	1	204	✓
	TELEPH	B		BLK	1	204	✓
	ELECT	C		BLK	1	205	✓
	COMM	C		BLK	1	205	✓
	TELEPH	C		BLK	1	205	✓
	COMM	D		BLK	1	205	✓
	ELECT	D		BLK	1	205	✓
	TELEPH	D		BLK	1	205	✓
	CORE	HER D/D	(2)	HOCHIKI	1	264	✓
	RETURN	D/D NORTH		HOCHIKI	1	263	✓
(A)	RETURN	D/D SOUTH		HOCHIKI	1	263	LED
20	COMM	A-B	(2)	BLK	1	203	
	ELECT	A-B	(2)	BLK	1	203	
	TELEPH	A-B	(2)	BLK	1	203	
	TELEPH	C-D	(2)	BLK	1	202	
	COMM	C-D	(2)	BLK	1	202	
	ELECT	C-D	(2)	BLK	1	202	
	PASS	ELEV.		BLK	1	019	✓
	FREIGHT	ELEV.		EDWDS	1	019	
	PLENUM	RETURN	NORTH	HOCHIKI	1	261	
	PLENUM	D/D RET	SOUTH	HOCHIKI	1	261	
	PLENUM	D/D RET	EAST	HOCHIKI	3	045	✓

PREVENTIVE MAINTENANCE CONTRACT

INVOICE TO: W.T.C. N.Y.C.

SERVICEMAN ASSIGNED: J. Tower, F. Rosario

SEE AT JOB SITE: F.S.I

DATE SCHEDULED: 2-29-00

CONTRACT #: S/C 00818

TYPE OF SYSTEM: 8400

FEE SERVICE #:

P.O #:

CALL AUHTORIZED BY | PHONE | EXT

☑ MAINTENANCE ☑ TEST

☐ JOB COMPLETE ☐ JOB INCOMPLETE

☐ SYSTEM ON LINE ☐ SYSTEM OFF LINE

DEPARTED SHOP	TIME IN	TIME OUT	RETURNED SHOP	TOTAL HOURS
AM PM	800 AM PM	430 AM PM	AM PM	

MATERIAL RECORD

QUANTITY	DESCRIPTION	COST

CUSTOMER NAME (PRINT): SILVERSTEIN

CUSTOMER SIGNATURE: Laura Cunningham

SERVICEMAN SIGNATURE: J Tower

AUTHORIZATION FOR FIRE ALARM INTERRUPTION
The undersigned has been advised by Fire Service Inc. representative that it may be necessary to interrupt the fire protection service by disconnecting the system and/or a component in the performance of their assigned work.
The undersigned hereby assumes the responsibility for the notification of the authorities at the time the interruption is initiated and will take all of the precautions deemed necessary during this period of interruption and hold harmless Fire Service Inc. and its employees regarding interruption of fire protection service during this service of the equipment.

TIME _____ DATE _____ NAME _____ X _____

SERVICE PERFORMED & REMAINING: Courtesy S/ Contract on Smoke Detection Units on FBO's 21 & 20 (ASSOR Listed Locations) — Cleaned & Tested. —

(1) NOTE: Return Duct Detection South Side on 21st Fl. (Needs LED - Broken). —

(2) Also check / Bypass Function on Duct S/D Return Unit 20th Fl (Cable 3 - Core 045 East Side. — System Put Back to Operation

(A) INACCESSIBLE (B) MISSING (C) DEFECTIVE (D) OTHER

FIRE SERVICE INCORPORATED

21919

Subsidiary of Firecom, Inc.
39-27 Fifty Ninth Street
Woodside, New York 11377
(718) 899-2311

REPORT OF FIELD SERVICE

LOCATIONS | **DEVICES**

FLOOR	A	B	C		MANUAL STA.	CABLE	XTNDR TST
35	056	057	195		✓✓✓	2	✓
34	054	055			✓✓	2	✓
33	053	052			✓✓	2	✓
32	051	050			✓✓	2	✓
31	048	049			✓✓	2	✓
30	046	047			✓✓	2	✓
29	044	045			✓✓	2	✓
28	042	043			✓✓	2	✓
27	040	041			✓✓	2	✓
27	040 → EAST	Corridor			✓	2	✓
26	038	039			✓✓	2	✓
26	038 → EAST	Corridor			✓	2	✓

41ST 'B' EXIT M/STATION 069 N/A - FIELD WIRING OPEN. - FOREST ELECT. NOTIFIED TO RUN WIRING / TO TTB ON 42ND FL. - (FLOOR UNDER CONSTRUCTION). —

INVOICE TO: T.W.T.C.
N.Y.C.

SERVICEMAN ASSIGNED: J. TORRES, F. ROSARIO	SEE AT JOB SITE: F.S.I.
	DATE SCHEDULED: 2-2-00
CONTRACT #: S/C00818	TYPE OF SYSTEM: 8500
FEE SERVICE #	P.O. # -
CALL AUHTORIZED BY	PHONE / EXT
☑ MAINTENANCE	☑ TEST
☑ JOB COMPLETE	☐ JOB INCOMPLETE
☐ SYSTEM ON LINE	☐ SYSTEM OFF LINE

DEPARTED SHOP	TIME IN	TIME OUT	RETURNED SHOP	TOTAL HOURS
AM PM	800 AM PM	430 AM PM	AM PM	

MATERIAL RECORD

QUANTITY	DESCRIPTION	COST
	PREVENTIVE MAINTENANCE CONTRACT	

CUSTOMER NAME (PRINT): SILVERSTEIN
CUSTOMER SIGNATURE:
SERVICEMAN SIGNATURE:

AUTHORIZATION FOR FIRE ALARM INTERRUPTION
The undersigned has been advised by Fire Service Inc. representative that it may be necessary to interrupt the fire protection service by disconnecting the system and/or a component in the performance of their assigned work.
The undersigned hereby assumes the responsibility for the notification of the authorities at the time the interruption is initiated and will take all of the precautions deemed necessary during the period of interruption and hold harmless Fire Service Inc. and its employees regarding interruption of fire protection service during their service of the equipment.

NAME DATE TIME

SERVICE PERFORMED & REMAINING: CONTINUED CHECK / TESTED MANUAL @ ALL STATIONS ALARMS / ACTIVATION ON FLOORS (ABOVE LISTED). —
NOTE: 41ST FL 'B' EXIT UNIT REMOVED / WIRING OUT / FLOOR UNDER CONSTRUCTION. — FOREST ELECTRIC NOTIFIED UNIT TO BE RESTORED (REWIRED) ON LOCATION. —

(A) INACCESSIBLE (B) MISSING (C) DEFECTIVE (D) OTHER

FIRE SERVICE INCORPORATED

21918

Subsidiary of Firecom, Inc.
39-27 Fifty Ninth Street
Woodside, New York 11377
(718) 899-2311

REPORT OF FIELD SERVICE

LOCATIONS | **DEVICES**

INVOICE TO: T.W.T.C.
N.Y.C

FLOOR	EXIT A	EXIT B	EXIT C		CABLE	XTNDR	H/STA
48	147				2	147	✓
47	080	081	082		2		✓✓✓
47	FITNESS AREA				2	084	✓✓
46	079	078	—		2		✓✓
45	076	077	—		2		✓✓
44	074	075	-		2		✓✓
43	072	073			2		✓✓
42	071	070	199-4		2		✓✓✓
41	068	069	198-4		2		✓✓✓
40	067	066	197-4		2		✓✓✓
39	065	064	193-4		2		✓✓✓
39	AUDITORIUM EXIT				4	194	✓✓
38	062	063	192-4		2		✓✓✓
37	060	061	145-4		2		✓✓✓
36	058	059	144-4		2		✓✓✓
	(R) → 058 A EXIT - N/G - Broken S/W.						
	—	—	—				
		TAMPERS			TEST	ok	
46	2nd FL	153 - 152			✓		
46	"	151 - 150			✓		
46	"	149 - 148			✓		
41 ST	H/STA	069 'B' EXIT WIRING CUT / OPEN					
	FIELD	WIRING OPEN / UNIT REMOVED. —					

SERVICEMAN ASSIGNED: J. TORRES / E. ROSARIO
SEE AT JOB SITE: F.S.I.
DATE SCHEDULED: 2-1-00
CONTRACT #: SK00 818
TYPE OF SYSTEM: 8500
FEE SERVICE #:
P.O. #:
CALL AUHTORIZED BY:
PHONE:
EXT:

☒ MAINTENANCE ☐ TEST
☐ JOB COMPLETE ☐ JOB INCOMPLETE
☐ SYSTEM ON LINE ☐ SYSTEM OFF LINE

DEPARTED SHOP	TIME IN	TIME OUT	RETURNED SHOP	TOTAL HOURS
AM PM	300 AM PM	430 PM	AM PM	

MATERIAL RECORD

QUANTITY	DESCRIPTION	COST
	PREVENTIVE MAINTENANCE CONTRACT	

CUSTOMER NAME (PRINT): SILVERSTEIN
CUSTOMER SIGNATURE:
SERVICEMAN SIGNATURE: J. Torres / E. Rosario

AUTHORIZATION FOR FIRE ALARM INTERRUPTION
The undersigned has been advised by Fire Service Inc. representatives that it may be necessary to interrupt the fire protection service by disconnecting the system and/or a component in the performance of their assigned work.
The undersigned hereby assumes the responsibility for the notification of the authorities at the time the interruption is initiated and will take all of the precautions deemed necessary during the period of interruption and hold harmless Fire Service Inc. and its employees regarding interruption of fire protection service during their service of the equipment.

NAME DATE TIME

SERVICE PERFORMED & REMAINING

As per Contract check testing for proper Alarm / Reset Operations Manual pull stations on Floors 48 to 36th as listed Locations / Cable · Xtndrs — Codes · Amount —
NOTE: 36th Fl. 'A' Exit Unit #058 not operating - Broken S/W - Must be Replaced. — System all tested. — Also testing Tampers on 46th Fl. Pump Room. —

(A) INACCESSIBLE (B) MISSING (C) DEFECTIVE (D) OTHER

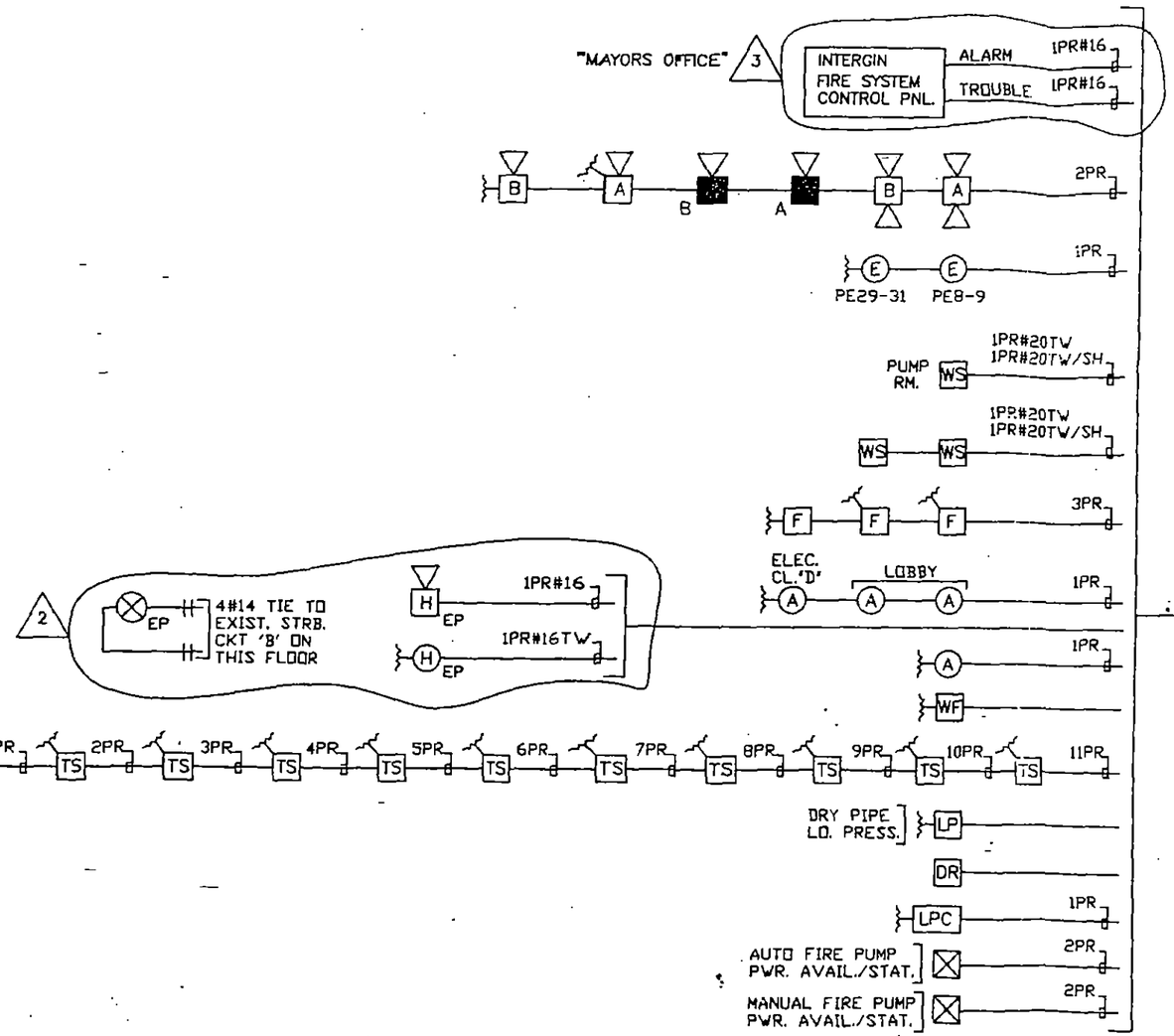

LEGEND

SYMBOL	DESCRIPTION
TTB	TRANSMISSION TERMINAL BOX
	STROBE LIGHT EP = EXPLOSION PROOF
	COMB. SPKR/STROBE
	SPEAKER F = FLUSH
A	AREA SMOKE DETECTOR
E	ELEVATOR LOBBY DETECTOR F = FLUSH
H	HEAT DETECTOR EP = EXPLOSION PROOF
SD	DUCT SMOKE DETECTOR
F/C	FUSE CUT-OUT
	FAN SHUTDOWN
R	RELAY
D	DAMPER
DR	DOOR RELEASE
F	MANUAL STATION
WS	WARDEN STATION
	END OF LINE RESISTOR
	STAIR SPEAKER
WF	WATERFLOW SWITCH
TS	TAMPER SWITCH
	BI-DIRECTIONAL SPEAKER
J	JUNCTION BOX
LPC	LOW PRESSURE COMPRESSURE
LP	LOW PRESSURE SWITCH
H	HORN EP = EXPLOSION PROOF

3	11/10/98	C.S.	ADDED (1) INTERGIN FIRE SYS. CONTROL PANEL ON 1ST FL. FOR 'MAYORS OFFICE' PER FJ-64637-02.
2	9/29/98	C.S.	ADDED (1) HORN, (1) STROBE & (1) HEAT DET. ON 1ST FL. PER FJ-64637.
1	8/25/98	C.S.	RISER REDRAWN. SEE DWG# E-504111-1 FOR REFERENCING PAST REVISIONS.

REV | DATE | BY | DESCRIPTION

OFFICE BUILDING
7 WORLD TRADE CENTER
N.Y.C.

CONTRACTOR | ENGINEER

PARTIAL RISER DIAGRAM
1ST FLOOR

FIRECOM, INC.
CASE/ACME
36-27 STREET
WOODSIDE, NEW YORK 11377

DRN	L.H.
APPVD	
ENGR	C.S.
CKD	
DATE	8/25/98
SCALE	N.T.S.
SHEET	1
OF	2
JOB#	FJ-26840
DWG#	B-504111-01
REV	3

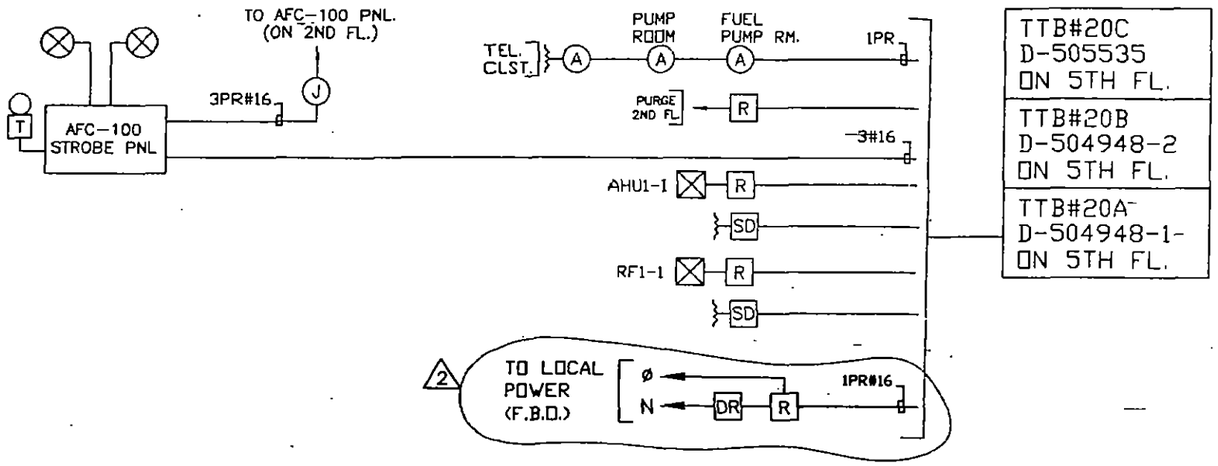

1ST FLOOR

LEGEND

SYMBOL	DESCRIPTION
TTB	TRANSMISSION TERMINAL BOX
⊗	STROBE LIGHT EP = EXPLOSION PROOF
▷□⊗	COMB. SPKR/STROBE
▷□	SPEAKER F = FLUSH
A	AREA SMOKE DETECTOR
E	ELEVATOR LOBBY DETECTOR F = FLUSH
H	HEAT DETECTOR EP = EXPLOSION PROOF
SD	DUCT SMOKE DETECTOR
F/C	FUSE CUT-OUT
⊠	FAN SHUTDOWN
R	RELAY
D	DAMPER
DR	DOOR RELEASE
F	MANUAL STATION
WS	WARDEN STATION
~	END OF LINE RESISTOR
▶□	STAIR SPEAKER
WF	WATERFLOW SWITCH
TS	TAMPER SWITCH
▷□◁	BI-DIRECTIONAL SPEAKER
J	JUNCTION BOX
LPC	LOW PRESSURE COMPRESSURE
LP	LOW PRESSURE SWITCH
▷H	HORN EP = EXPLOSION PROOF

REV	DATE	BY	DESCRIPTION
2	05/04/00	JM	ADDED (1) RELAY FOR DOOR RELEASE ON 1ST FL. PER LJ-80208.
1	8/25/98	CS	RISER REDRAWN. SEE DWG# E-504111-1 FOR REFERENCING PAST REVISIONS.

OFFICE BUILDING
7 WORLD TRADE CENTER
N.Y.C.

CONTRACTOR | ENGINEER

PARTIAL RISER DIAGRAM
1ST FLOOR

DRN	L.H.
APPVD	
ENGR	C.S.
CKD	
DATE	8/25/98
SCALE	N.T.S.
SHEET	2
OF	2
REV	2

FIRECOM, INC.
CASE/ACME
36-17 STREET
WOODSIDE, NEW YORK 11377

JOB# FJ-26840
DWG# E-504111-01

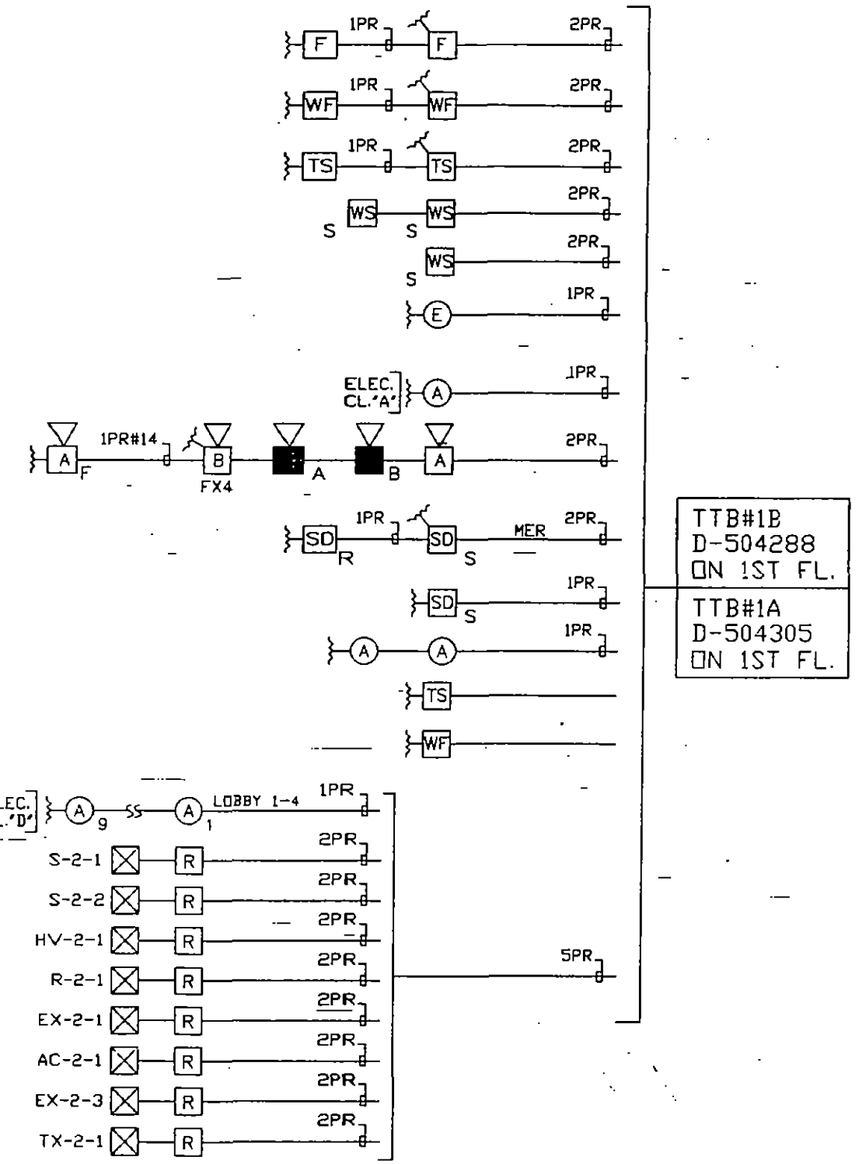

TTB#1B
D-504288
ON 1ST FL.

TTB#1A
D-504305
ON 1ST FL.

LEGEND

SYMBOL	DESCRIPTION
TTB	TRANSMISSION TERMINAL BOX
⊗	STROBE LIGHT
▷□⊗	COMB. SPKR/STROBE
▷□	SPEAKER F = FLUSH
A	AREA SMOKE DETECTOR
E	ELEVATOR LOBBY DETECTOR F = FLUSH
H	HEAT DETECTOR
SD	DUCT SMOKE DETECTOR S = SUPPLY R = RETURN
F/C	FUSE CUT-OUT
⊠	FAN SHUTDOWN
R	RELAY
D	DAMPER
DR	DOOR RELEASE
F	MANUAL STATION
WS	WARDEN STATION S = SURFACE
⊣	END OF LINE RESISTOR
▶□	STAIR SPEAKER
WF	WATERFLOW SWITCH
TS	TAMPER SWITCH
PH	PHOTO HEAT/SMOKE DETECTOR

2ND FLOOR

REV	DATE	BY	DESCRIPTION
1	05/01/00	JM	RISER REDRAWN. SEE DWG# E-504111-1 FOR REFERENCING PAST REVISIONS.

OFFICE BUILDING
7 WORLD TRADE CENTER
N.Y.C.

CONTRACTOR | ENGINEER

PARTIAL RISER DIAGRAM
2ND FLOOR

FIRECOM, INC.
CASE/ACME
38-27 STREET
WOODSIDE, NEW YORK 11377

DRN	L.H.
APPVD	
ENGR	J.M.
CKD	
DATE	05/01/00
SCALE	N.T.S.
SHEET	1
OF	2
REV	1
JOB#	FJ-26840
DWG#	E-504111-02

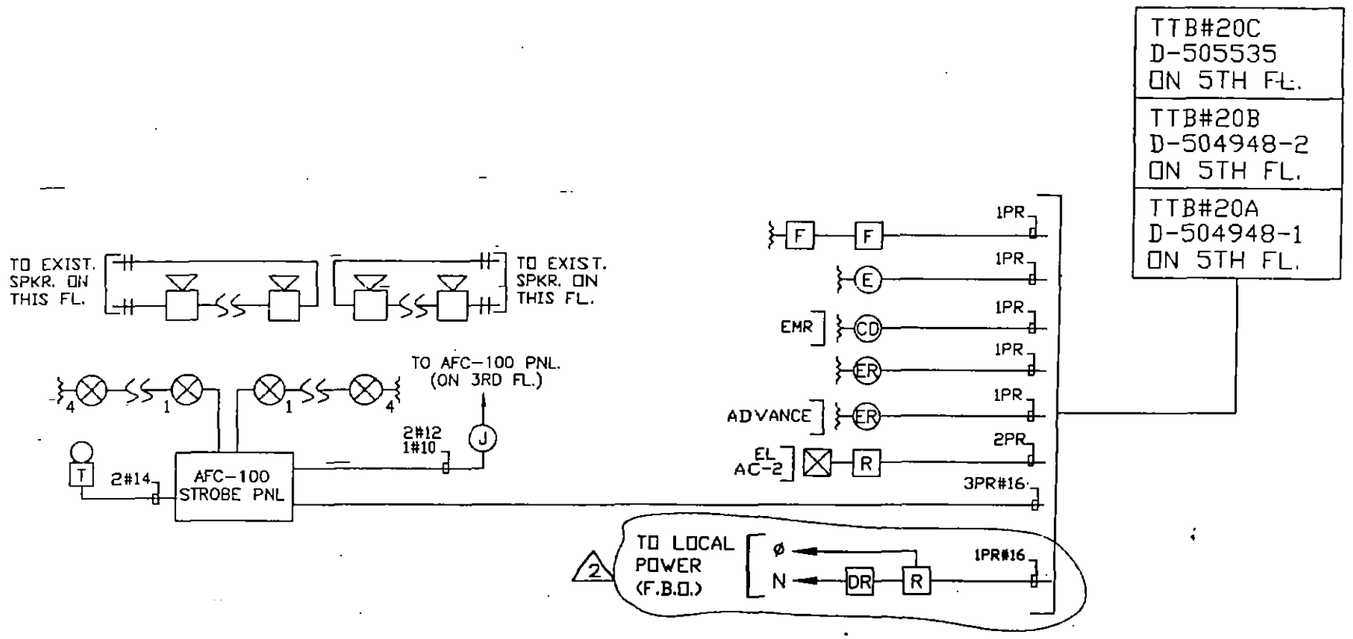

TTB#20C
D-505535
ON 5TH FL.

TTB#20B
D-504948-2
ON 5TH FL.

TTB#20A
D-504948-1
ON 5TH FL.

LEGEND

SYMBOL	DESCRIPTION
TTB	TRANSMISSION TERMINAL BOX
⊗	STROBE LIGHT EP = EXPLOSION PROOF
▷□⊗	COMB. SPKR/STROBE
▷□	SPEAKER F = FLUSH
A	AREA SMOKE DETECTOR
E	ELEVATOR LOBBY DETECTOR F = FLUSH
H	HEAT DETECTOR EP = EXPLOSION PROOF
SD	DUCT SMOKE DETECTOR
F/C	FUSE CUT-OUT
⊠	FAN SHUTDOWN
R	RELAY
D	DAMPER
DR	DOOR RELEASE
F	MANUAL STATION
WS	WARDEN STATION
≈	END OF LINE RESISTOR
▶□	STAIR SPEAKER
WF	WATERFLOW SWITCH
TS	TAMPER SWITCH
▷□◁	BI-DIRECTIONAL SPEAKER
J	JUNCTION BOX
ER	ELEVATOR RECALL JUNCTION BOX
CD	COMBINATION SMOKE & HEAT DETECTOR

REV	DATE	BY	DESCRIPTION
2	05/04/00	JM	ADDED (1) RELAY FOR DOOR RELEASE ON 2ND FL. PER LJ-80208.
1	05/02/00	JM	RISER REDRAWN. SEE DWG# E-504111-1 FOR REFERENCING PAST REVISIONS.

OFFICE BUILDING
7 WORLD TRADE CENTER
N.Y.C.

CONTRACTOR | ENGINEER

PARTIAL RISER DIAGRAM
2ND FLOOR

FIRECOM, INC.
CASE/ACME
38-27 STREET
WOODSIDE, NEW YORK 11377

DRN	L.H.
APP'D	
ENGR	J.M.
CKD	
DATE	05/02/00
SCALE	N.T.S.
SHEET	2
JOB#	FJ-26840
OF	2
DWG#	B-504111-02
REV	2

2ND FLOOR

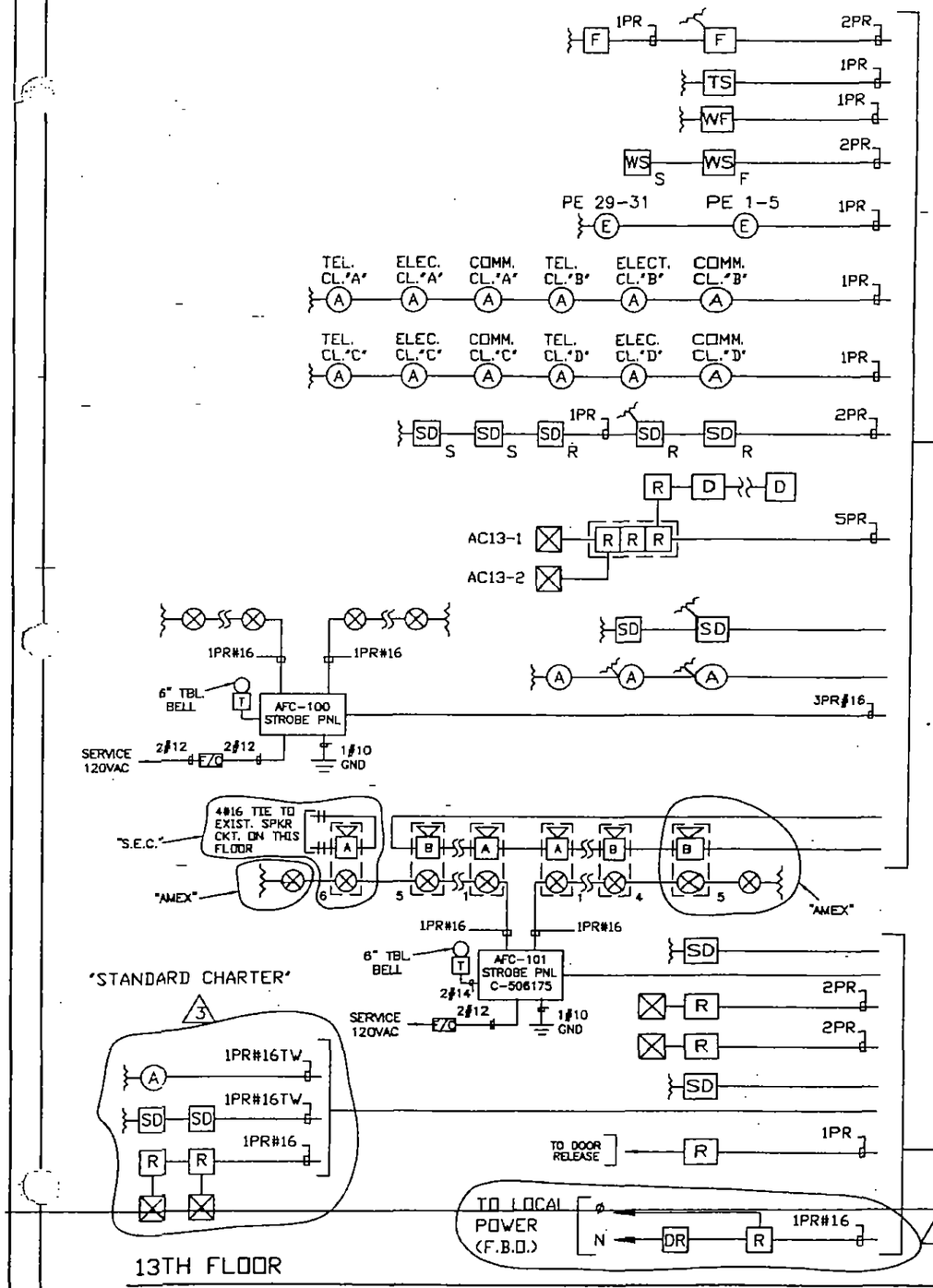

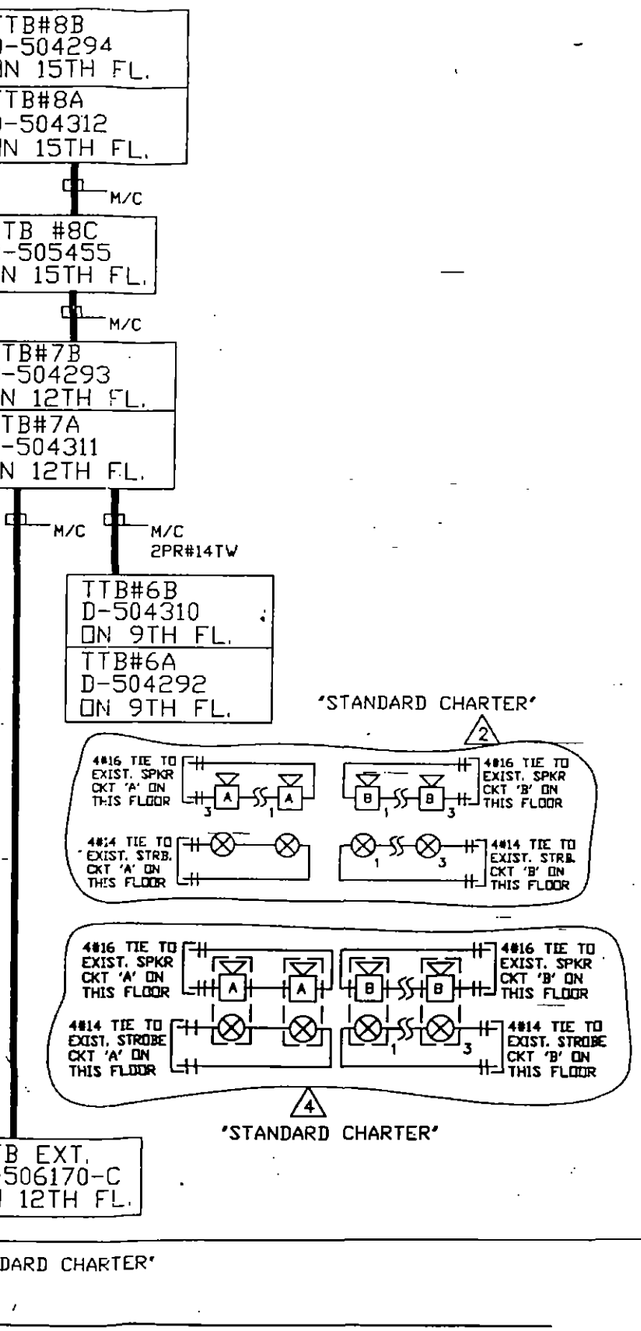

LEGEND

SYMBOL	DESCRIPTION
TTB	TRANSMISSION TERMINAL BOX
	STROBE LIGHT
	COMB. SPKR/STROBE
	SPEAKER
A	AREA SMOKE DETECTOR
E	ELEVATOR LOBBY DETECTOR
H	HEAT DETECTOR
SD	DUCT SMOKE DETECTOR — S = SUPPLY R = RETURN
F/C	FUSE CUT-OUT
	FAN SHUTDOWN
R	RELAY
D	DAMPER
DR	DOOR RELEASE
F	MANUAL STATION
WS	WARDEN STATION — S = SURFACE F = FLUSH
	END OF LINE RESISTOR
	STAIR SPEAKER
WF	WATERFLOW SWITCH
TS	TAMPER SWITCH

4	10/10/00	JM	ADDED (5) SPKR./STRBS. FOR "STANDARD CHARTER" PER LJ-80452.
3	8/30/99	CS	ADDED (2) DUCT SMK. DETS., (2) RELAYS FOR FAN SHUTDOWN & (1) AREA SMK. DET. ON 13TH FL. FOR "STANDARD CHARTER" PER FJ-65220-01.
2	7/9/99	CS	ADDED (6) SPEAKERS, (5) STROBES & (1) RELAY FOR DOOR RELEASE ON 13TH FL. FOR "STANDARD CHARTER" PER FJ-65220.
1	7/9/99	CS	RISER REDRAWN. SEE DWG# E-504111-2 SH. 2 FOR REFERENCING PAST REVISIONS.

REV	DATE	BY	DESCRIPTION

OFFICE BUILDING
7 WORLD TRADE CENTER
N.Y.C.

CONTRACTOR | ENGINEER

PARTIAL RISER DIAGRAM
13TH FLOOR

FIRECOM, INC.
CASE/ACME
39-27 STREET
WOODSIDE, NEW YORK 11377

DRN	L.H.
APPVD	
ENGR	C.S.
CKD	
DATE	7/9/99
SCALE	N.T.S.
SHEET	1
OF	2
JOB#	FJ-26840
DWG#	B-504111-13
REV	4

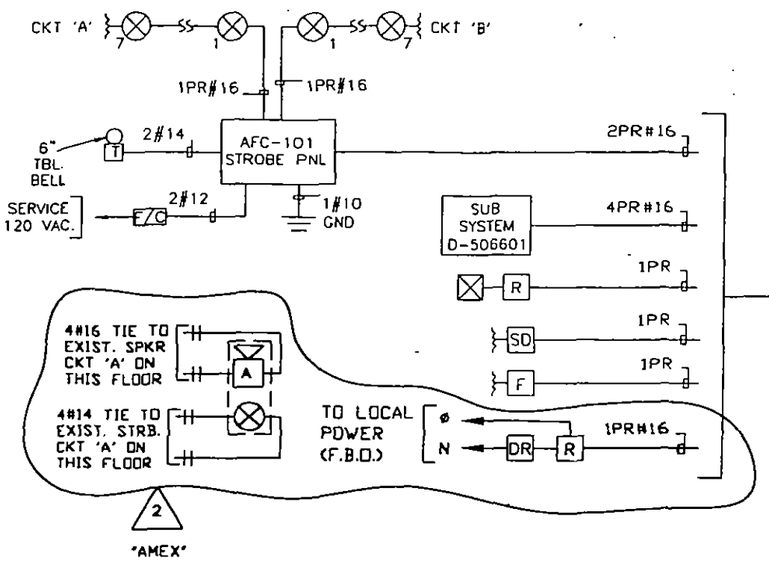

LEGEND	
SYMBOL	DESCRIPTION
TTB	TRANSMISSION TERMINAL BOX
⊗	STROBE LIGHT
▷□⊗	COMB. SPKR/STROBE
▷□	SPEAKER F = FLUSH
(A)	AREA SMOKE DETECTOR
(E)	ELEVATOR LOBBY DETECTOR F = FLUSH
(H)	HEAT DETECTOR
SD	DUCT SMOKE DETECTOR S = SUPPLY R = RETURN
F/C	FUSE CUT-OUT
⊠	FAN SHUTDOWN
R	RELAY
(D)	DAMPER
DR	DOOR RELEASE
F	MANUAL STATION
WS	WARDEN STATION S = SURFACE F = FLUSH
	END OF LINE RESISTOR
▶□	STAIR SPEAKER
WF	WATERFLOW SWITCH
TS	TAMPER SWITCH
(PH)	PHOTO HEAT/SMOKE DETECTOR

REV	DATE	BY	DESCRIPTION
2	9/13/99	C.S.	ADDED (1) SPKR./STRB. & (1) RELAY FOR DOOR RELEASE ON 7TH FL. FOR "AMEX" PER FJ-65298.
1	9/13/99	C.S.	EXT. TTB#22A (D-506284-A) & ASSOCIATED DEVICES TRANFERRED FROM DWG. B-504111-07 SH. #1 TO THIS DWG.

OFFICE BUILDING
7 WORLD TRADE CENTER
N.Y.C.

CONTRACTOR | ENGINEER

~~PARTIAL RISER DIAGRAM~~
7TH FLOOR

DRN	L.H.
APPVD	
ENGR	C.S.
CKD	
DATE	9/13/99
SCALE	N.T.S.
SHEET	2
OF	2
REV	2

FIRECOM, INC. CASE/ACME
36-27 STREET WOODSIDE, NEW YORK 11377

JOB# FJ-26840
DWG# B-504111-07

7TH FLOOR

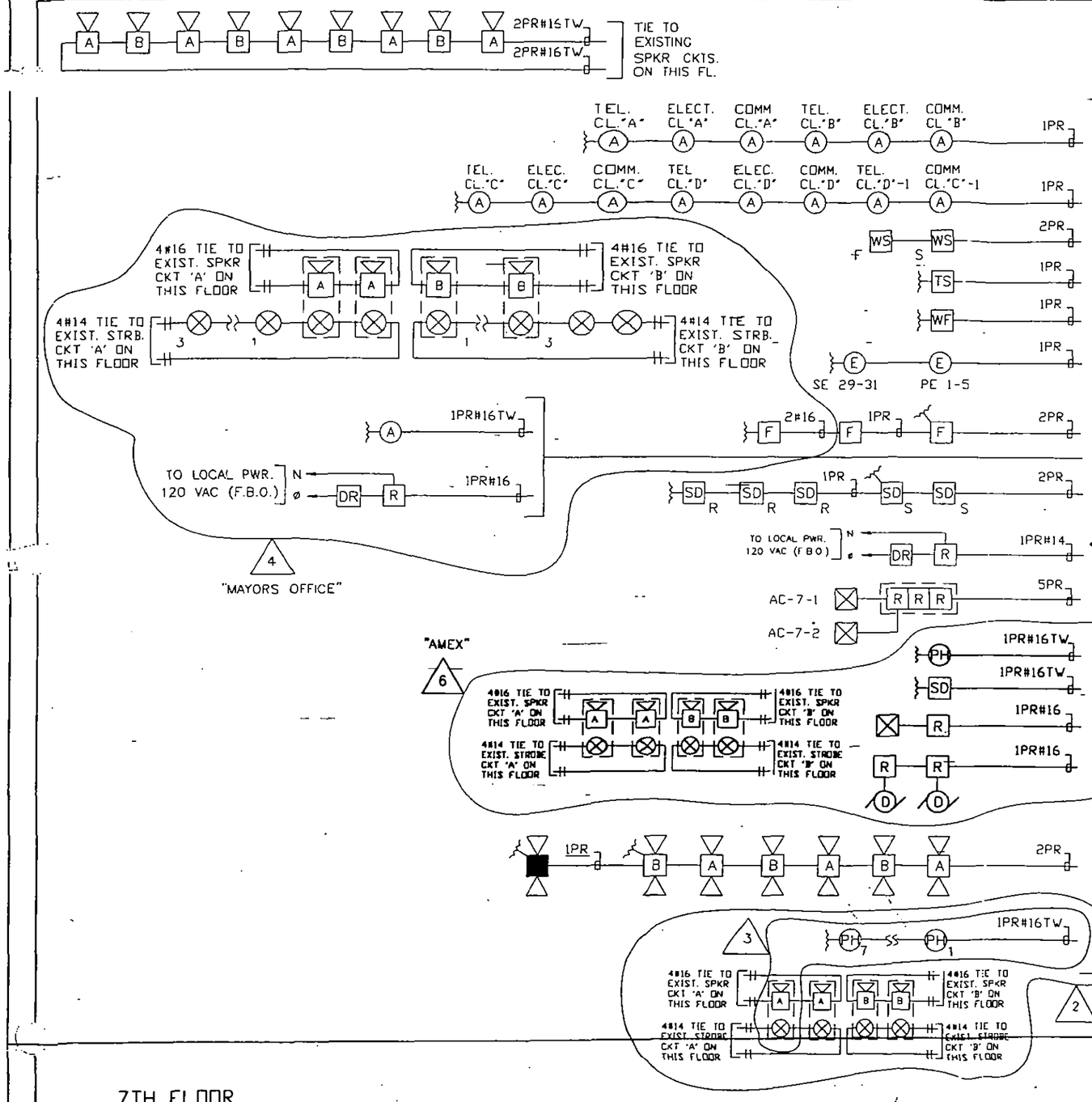

LEGEND

SYMBOL	DESCRIPTION
TTB	TRANSMISSION TERMINAL BOX
	STROBE LIGHT
	COMB. SPKR/STROBE
	SPEAKER F = FLUSH
A	AREA SMOKE DETECTOR
E	ELEVATOR LOBBY DETECTOR F = FLUSH
H	HEAT DETECTOR
SD	DUCT SMOKE DETECTOR S = SUPPLY R = RETURN
F/C	FUSE CUT-OUT
	FAN SHUTDOWN
R	RELAY
D	DAMPER
DR	DOOR RELEASE
F	MANUAL STATION
WS	WARDEN STATION S = SURFACE F = FLUSH
	END OF LINE RESISTOR
	STAIR SPEAKER
WF	WATERFLOW SWITCH
TS	TAMPER SWITCH
PH	PHOTO HEAT/SMOKE DETECTOR

6	11/15/99	C.S.	ADDED (4) SPKR./STRBS., (1) PHOTO HEAT/SMK. DET., (1) DUCT SMK. DET., (1) RELAY FOR FAN SHUTDOWN & (2) RELAYS FOR DAMPER CONTROL ON 7TH FL. FOR "AMEX" PER FJ-65418.
5	9/15/99	C.S.	EXT. TTB #22A (D-506284-A) & ASSOCIATED DEVICES TRANSFERRED FROM THIS DWG. TO DWG #B-504111-07 SH#2
4	1/20/99	C.S.	ADDED (5) SPKR./STRBS. (5) STRBS.,(1) MANUAL-PULL STATION (1) RELAY FOR DOOR RELEASE & (1) AREA SMK. DET. ON 7TH FL. FOR "MAYORS OFFICE" PER FJ-64918.
3	11/21/98	C.S.	REPLACED (2) HEAT DETECTORS WITH (7) PHOTO HEAT/SMK DETS. & ADDED (1) SPKR. STROBE ON 7TH FL. PER FJ-64637.
2	9/9/98	C.S.	ADDED (2) HEAT DETS. & (3) SPKR./STRBS ON 7TH FL PER FJ-64637.
1	8/25/98	C.S.	RISER REDRAWN. SEE DWG# E-504111-1 FOR REFERENCING PAST REVISIONS.

REV	DATE	BY	DESCRIPTION

OFFICE BUILDING
7 WORLD TRADE CENTER
N.Y.C.

CONTRACTOR | ENGINEER

PARTIAL RISER DIAGRAM
7TH FLOOR

FIRECOM, INC.
CASE/ACME
39-27 STREET
WOODSIDE, NEW YORK 11377

DRAWN	L.H.
APPVD	
ENGR	C.S.
CHKD	
DATE	8/25/98
SCALE	N.T.S.
SHEET	1
OF	2
JOB#	FJ-26840
DWG#	B-504111-07
REV	6

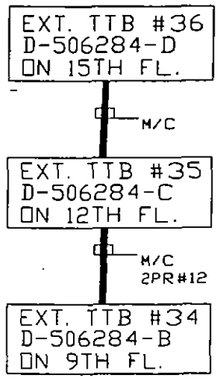

13TH FLOOR

LEGEND

SYMBOL	DESCRIPTION
TTB	TRANSMISSION TERMINAL BOX
⊗	STROBE LIGHT
▷□⊗	COMB. SPKR/STROBE
▷□	SPEAKER F = FLUSH
A	AREA SMOKE DETECTOR
E	ELEVATOR LOBBY DETECTOR
H	HEAT DETECTOR
SD	DUCT SMOKE DETECTOR S = SUPPLY R = RETURN
F/C	FUSE CUT-OUT
⊠	FAN SHUTDOWN
R	RELAY
D	DAMPER
DR	DOOR RELEASE
F	MANUAL STATION
WS	WARDEN STATION S = SURFACE F = FLUSH
⏚	END OF LINE RESISTOR
▶□	STAIR SPEAKER
WF	WATERFLOW SWITCH
TS	TAMPER SWITCH
J	JUNCTION BOX
CD	COMBINATION SMOKE & HEAT DETECTOR

REV	DATE	BY	DESCRIPTION
1	7/7/99	C.S.	RISER REDRAWN. SEE DWG# E-504111-2 SH. 2 FOR REFERENCING PAST REVISIONS.

OFFICE BUILDING
7 WORLD TRADE CENTER
N.Y.C.

CONTRACTOR | ENGINEER

PARTIAL RISER DIAGRAM
13TH FLOOR

DRN	L.H.
APPVD	
ENGR	C.S.
CKD	
DATE	7/9/99
SCALE	N.T.S.
SHEET	2
OF	2
REV	1

FIRECOM, INC.
CASE/ALME
36-27 STREET
WOODSIDE, NEW YORK 11377

JOB# FJ-26840
DWG# E-504111-13

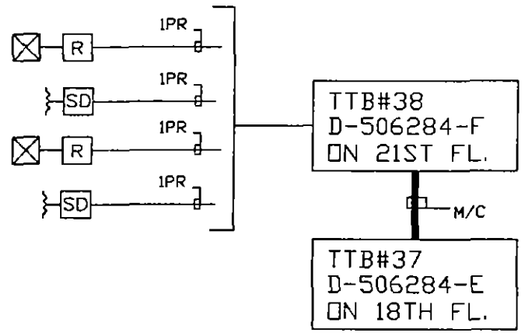

LEGEND	
SYMBOL	DESCRIPTION
TTB	TRANSMISSION TERMINAL BOX
	STROBE LIGHT
	COMB. SPKR/STROBE
	SPEAKER F = FLUSH
A	AREA SMOKE DETECTOR
E	ELEVATOR LOBBY DETECTOR F = FLUSH
H	HEAT DETECTOR
SD	DUCT SMOKE DETECTOR S = SUPPLY R = RETURN
F/C	FUSE CUT-OUT
	FAN SHUTDOWN
R	RELAY
D	DAMPER
DR	DOOR RELEASE
F	MANUAL STATION
WS	WARDEN STATION S = SURFACE F = FLUSH
	END OF LINE RESISTOR
	STAIR SPEAKER
WF	WATERFLOW SWITCH
TS	TAMPER SWITCH
	BI-DIRECTIONAL SPEAKER
SS	SUB-SYSTEM
CH	COMBINATION SMOKE & HEAT DETECTOR
J	JUNCTION BOX

20TH FLOOR

REV	DATE	BY	DESCRIPTION
1	03/02/01	JM	RISER REDRAWN. SEE DWG# E-504111-2 FOR REFERENCING PAST REVISIONS.

OFFICE BUILDING
7 WORLD TRADE CENTER
N.Y.C.

CONTRACTOR | ENGINEER

PARTIAL RISER DIAGRAM
20TH FLOOR
"SALOMON SMITH BARNEY"

FIRECOM, INC.
CASE/ACME
39-27 STREET
WOODSIDE, NEW YORK 11377

DRN	L.H.
APPVD	
ENGR	J.M.
CKD	
DATE	03/02/01
SCALE	N.T.S.
SHEET	2
OF	2
JOB#	FJ-26840
DWG#	B-504111-20
REV	

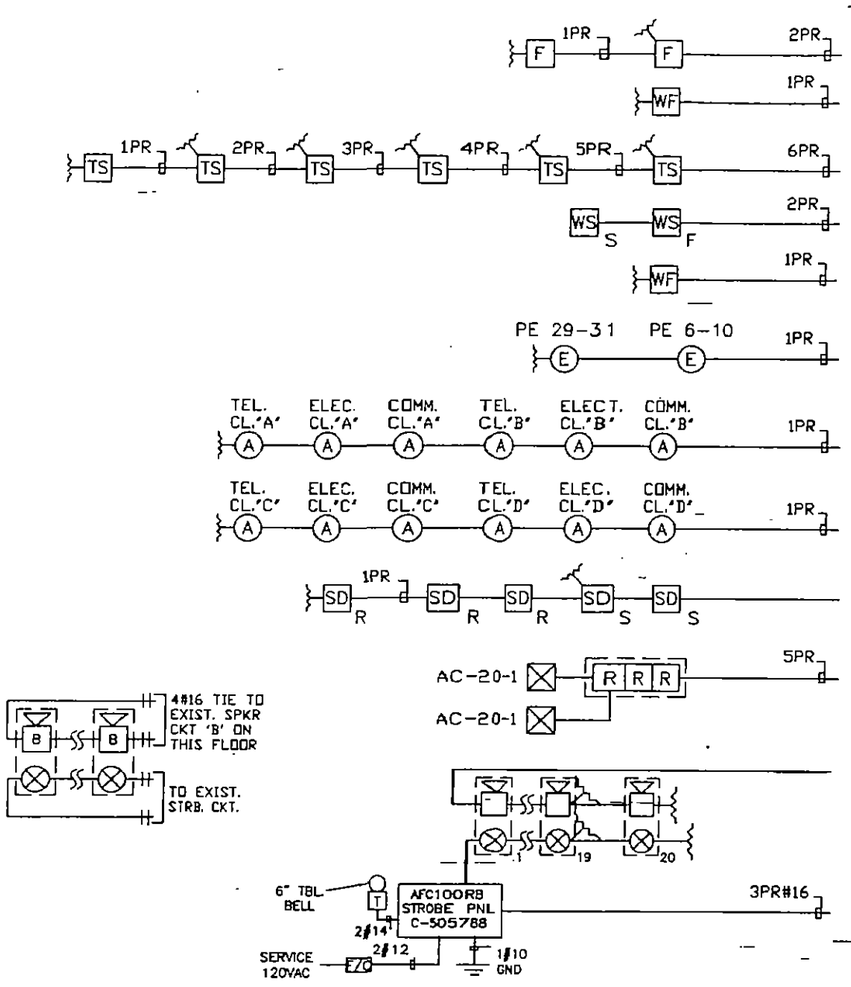

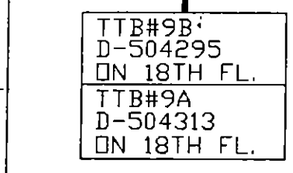

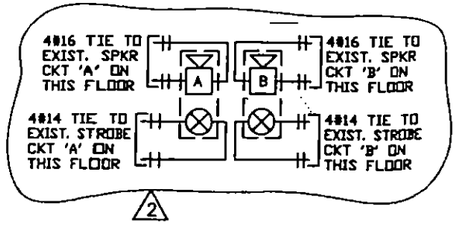

LEGEND	
SYMBOL	DESCRIPTION
TTB	TRANSMISSION TERMINAL BOX
	STROBE LIGHT
	COMB. SPKR/STROBE
	SPEAKER
A	AREA SMOKE DETECTOR
E	ELEVATOR LOBBY DETECTOR
H	HEAT DETECTOR
SD	DUCT SMOKE DETECTOR S = SUPPLY R = RETURN
F/C	FUSE CUT-OUT
	FAN SHUTDOWN
R	RELAY
D	DAMPER
DR	DOOR RELEASE
F	MANUAL STATION
WS	WARDEN STATION S = SURFACE F = FLUSH
	END OF LINE RESISTOR
	STAIR SPEAKER
WF	WATERFLOW SWITCH
TS	TAMPER SWITCH

REV	DATE	BY	DESCRIPTION
2	03/02/01	JM	ADDED (2) SPEAKER/STROBES PER LJ-80656.
1	03/02/01	JM	RISER REDRAWN. SEE DWG# E-504111-2 SH. 2 FOR REFERENCING PAST REVISIONS.

OFFICE BUILDING
7 WORLD TRADE CENTER
N.Y.C.

CONTRACTOR | ENGINEER

PARTIAL RISER DIAGRAM
20TH FLOOR

DWN	L.H.
APPVD	
ENGR	J.M.
CKD	
DATE	03/02/01
SCALE	N.T.S.
SHEET	1
OF	2
REV	2
JOB#	FJ-26840
DWG#	B-504111-20

FIRECOM, INC.
CASE/ACME
38-27 STREET
WOODSIDE, NEW YORK 11377

20TH FLOOR

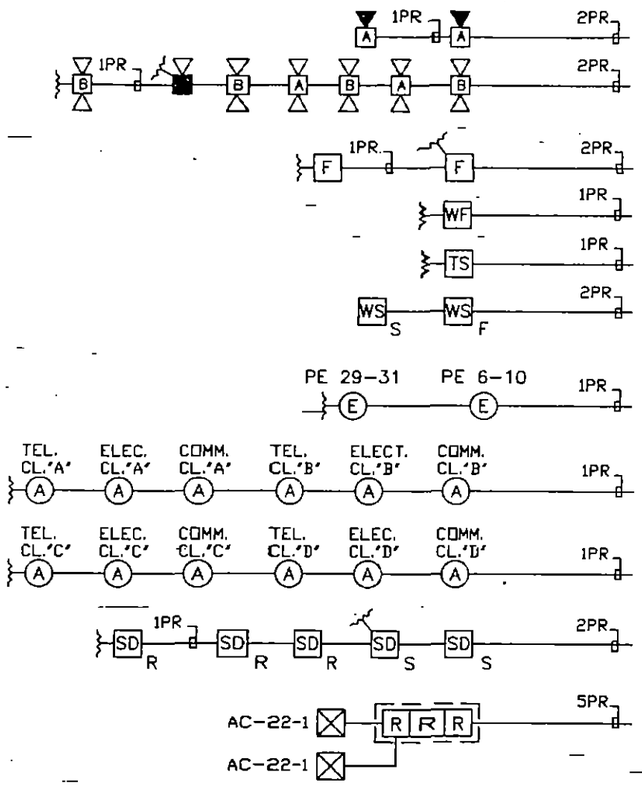

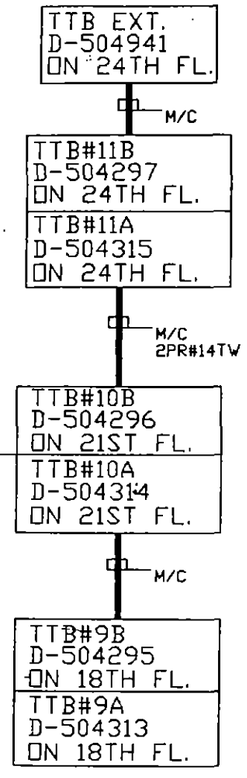

LEGEND	
SYMBOL	DESCRIPTION
TTB	TRANSMISSION TERMINAL BOX
⊗	STROBE LIGHT
▷□⊗	COMB. SPKR/STROBE
▷□	SPEAKER
A	AREA SMOKE DETECTOR
E	ELEVATOR LOBBY DETECTOR
H	HEAT DETECTOR
SD	DUCT SMOKE DETECTOR S = SUPPLY R = RETURN
F/C	FUSE CUT-OUT
⊠	FAN SHUTDOWN
R	RELAY
D	DAMPER
DR	DOOR RELEASE
F	MANUAL STATION
WS	WARDEN STATION S = SURFACE F = FLUSH
⊣	END OF LINE RESISTOR
▶□	STAIR SPEAKER
WF	WATERFLOW SWITCH
TS	TAMPER SWITCH

22ND FLOOR

REV	DATE	BY	DESCRIPTION
1	04/11/01	JM	RISER REDRAWN. SEE DWG# E-504111-2 SH. 3 FOR REFERENCING PAST REVISIONS.

OFFICE BUILDING
7 WORLD TRADE CENTER
N.Y.C.

CONTRACTOR | ENGINEER

PARTIAL RISER DIAGRAM
22ND FLOOR

FIRECOM, INC.
CASE/ACME
38-27 STREET
WOODSIDE, NEW YORK 11377

DRN	L.H.
APPVD	
ENGR	J.M.
CKD	
DATE	04/11/01
SCALE	N.T.S.
SHEET	1
JOB#	FJ-26840
OF	2
DWG#	E-504111-22
REV	1

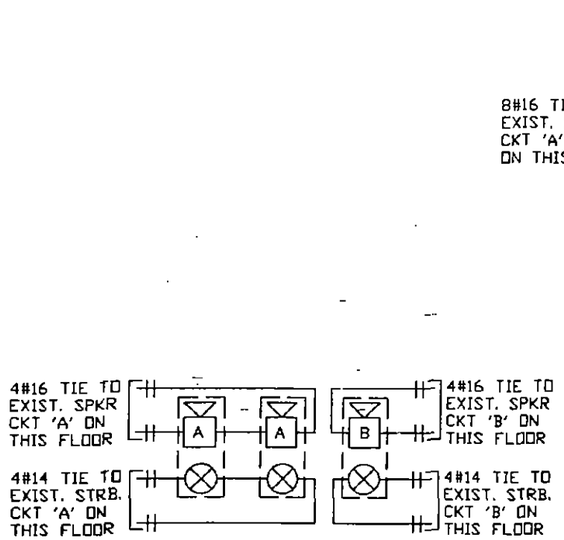

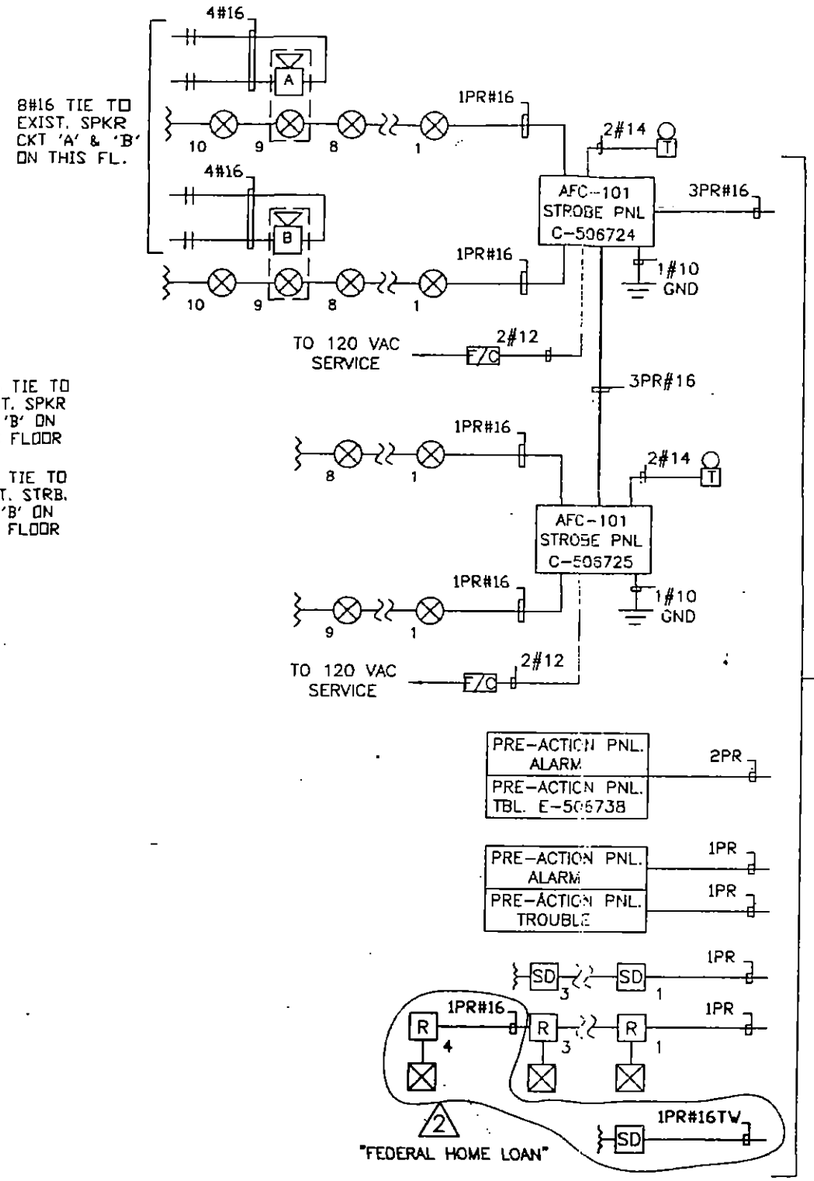

LEGEND

SYMBOL	DESCRIPTION
TTB	TRANSMISSION TERMINAL BOX
⊗	STROBE LIGHT
▷□⊗	COMB. SPKR/STROBE
▷□	SPEAKER
A	AREA SMOKE DETECTOR
E	ELEVATOR LOBBY DETECTOR
SD	DUCT SMOKE DETECTOR
F/C	FUSE CUT-OUT
⊠	FAN SHUTDOWN
R	RELAY
D	DAMPER
DR	DOOR RELEASE
F	MANUAL STATION
WS	WARDEN STATION
≷	END OF LINE RESISTOR
▶□	STAIR SPEAKER
WF	WATERFLOW SWITCH
TS	TAMPER SWITCH
J	JUNCTION BOX
CD	COMBINATION SMOKE & HEAT DETECTOR
SS	SUB-SYSTEM

2	04/11/01	JM	ADDED (1) DUCT SMK. DET. & (1) RELAY FOR FAN SHUTDOWN FOR 'FEDERAL HOME LOAN' PER LJ-80739.
1	04/11/01	JM	RISER REDRAWN. SEE DWG# E-504111-5 SH. 3 FOR REFERENCING PAST REVISIONS.

REV	DATE	BY	DESCRIPTION

OFFICE BUILDING
7 WORLD TRADE CENTER
N.Y.C.

CONTRACTOR | ENGINEER

PARTIAL RISER DIAGRAM
22ND FLOOR

FIRECOM, INC.
CASE/AUME
36-37 STREET
WOODSIDE, NEW YORK 11377

DRN	L.H.
APPVD	
ENGR	J.M.
CKD	
DATE	04/11/01
SCALE	N.T.S.
SHEET	2
OF	2
JOB#	FJ-26840
DWG#	B-504111-22
REV	7

22ND FLOOR

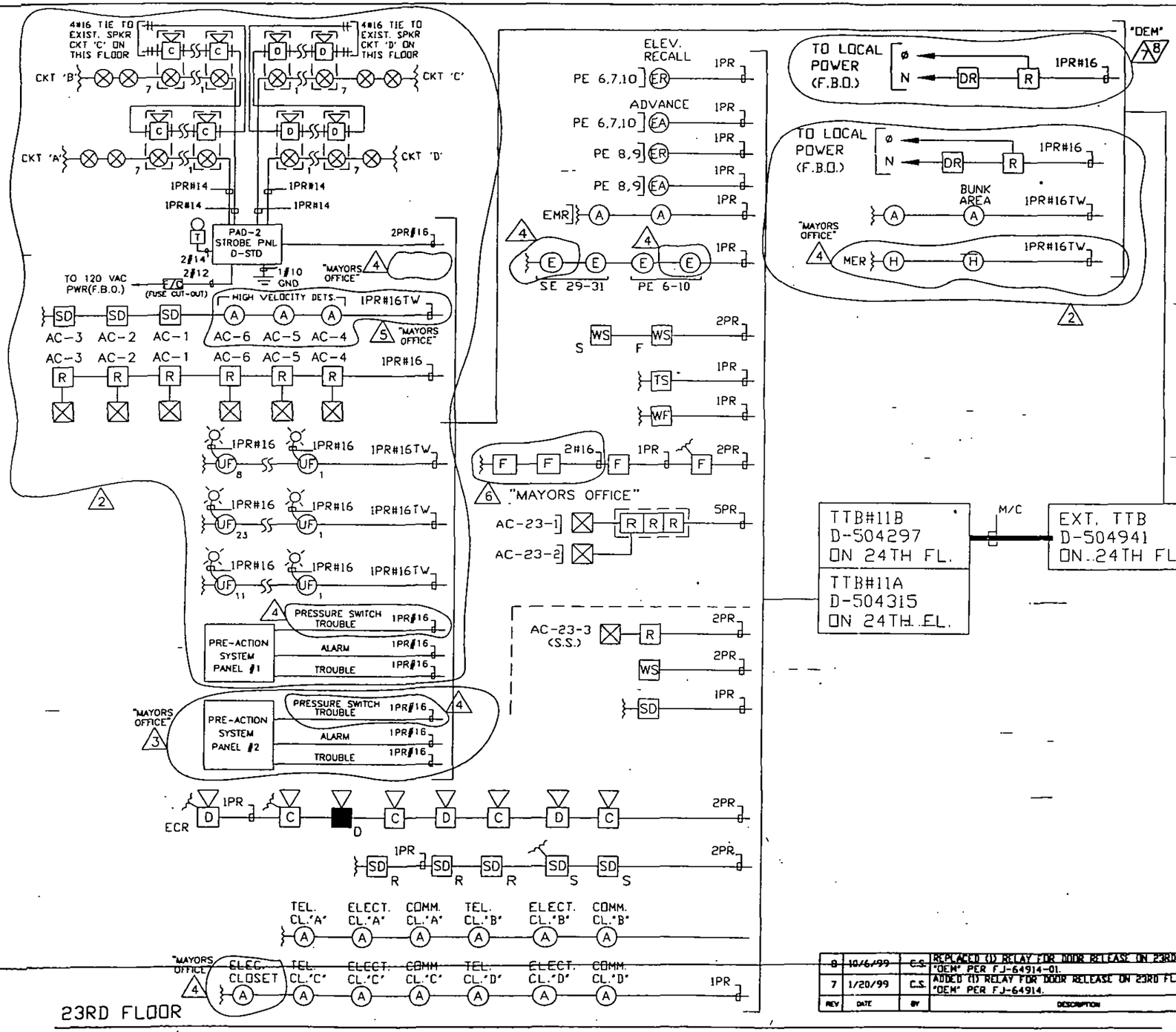

TTB#11B
D-504297
ON 24TH FL.

TTB#11A
D-504315
ON 24TH FL.

M/C

EXT. TTB
D-504941
ON 24TH FL.

LEGEND

SYMBOL	DESCRIPTION
TTB	TRANSMISSION TERMINAL BOX
	STROBE LIGHT
	COMB. SPKR/STROBE
	SPEAKER F = FLUSH
A	AREA SMOKE DETECTOR
E	ELEVATOR LOBBY DETECTOR. F = FLUSH
H	HEAT DETECTOR
SD	DUCT SMOKE DETECTOR S = SUPPLY R = RETURN
UF	UNDER FLOOR DETECTOR
	FAN SHUTDOWN
R	RELAY
D	DAMPER
DR	DOOR RELEASE
F	MANUAL STATION
WS	WARDEN STATION S = SURFACE F = FLUSH
	END OF LINE RESISTOR
	STAIR SPEAKER
WF	WATERFLOW SWITCH
TS	TAMPER SWITCH
ER	ELEVATOR RECALL JUNCTION BOX
EA	ELEVATOR ADVANCE
	REMOTE INDICATING LAMP

REV	DATE	BY	DESCRIPTION
6	12/28/98	C.S.	ADDED (2) MANUAL PULL STATIONS ON 23RD FL. FOR "MAYORS OFFICE" PER FJ-64899.
5	12/11/98	C.S.	REPLACED (3) DUCT DETS. WITH (3) HIGH VELOCITY AREA DETS. PER FJ-64637.
4	11/20/98	C.S.	DELETED (1) PRESSURE SWITCH, (2) TAMPER SWITCH & (2) WATER FLOW SWITCH. REPLACED (7) PHOTO HEAT/SMK. DETS. WITH (2) HEAT DETS. ADDED (2) ELEV. LOB. DETS. & (1) AREA SMK. DET. ADDED PRESSURE SWITCH (TROUBLE) CONN. TO PRE-ACTION SYSTEMS ON 23RD FL. FOR "MAYORS OFFICE" PER FJ-64637.
3	11/10/98	C.S.	ADDED (1) PRE-ACTION SYSTEM ON 23RD FL. FOR "MAYORS OFFICE" PER FJ-64637-02.
2	9/29/98	C.S.	ADDED (1) PAD-2 STRB PNL., (28) SPKR./STROBES, (7) STRBS., (6) DUCT SMK. DETS., (6) RELAYS FOR AC SHUTDOWN, (1) RELAY FOR DOOR RELEASE, (1) PRESSURE SWITCH, (2) TAMPER SWITCH, (2) WATER FLOW SWITCH, (42) UNDER FLOOR DETS., (1) PRE-ACTION SYSTEM; (2) AREA SMK. DETS., (7) PHOTO HEAT/SMK. DETS. & (42) INDICATING LAMPS ON 23RD FLOOR PER FJ-64637.
1	8/26/98	C.S.	RISER REDRAWN. SEE DWG# E-504111-3 FOR REFERENCING PAST REVISIONS.

REV	DATE	BY	DESCRIPTION
8	10/6/99	C.S.	REPLACED (1) RELAY FOR DOOR RELEASE ON 23RD FL. FOR "OEM" PER FJ-64914-01.
7	1/20/99	C.S.	ADDED (1) RELAY FOR DOOR RELEASE ON 23RD FL. FOR "OEM" PER FJ-64914.

OFFICE BUILDING
7 WORLD TRADE CENTER
N.Y.C.

PARTIAL RISER DIAGRAM
23RD FLOOR

DRWN	L.H.
APPVD	
ENGR	C.S.
CKD	
DATE	8/26/98
SCALE	N.T.S.
SHEET	1
OF	1
REV	8

CONTRACTOR | ENGINEER

FIRECOM, INC. CASE/ACME
38-27 STREET WOODSIDE, NEW YORK 11377

JOB# FJ-26840
DWG# E-504111-23

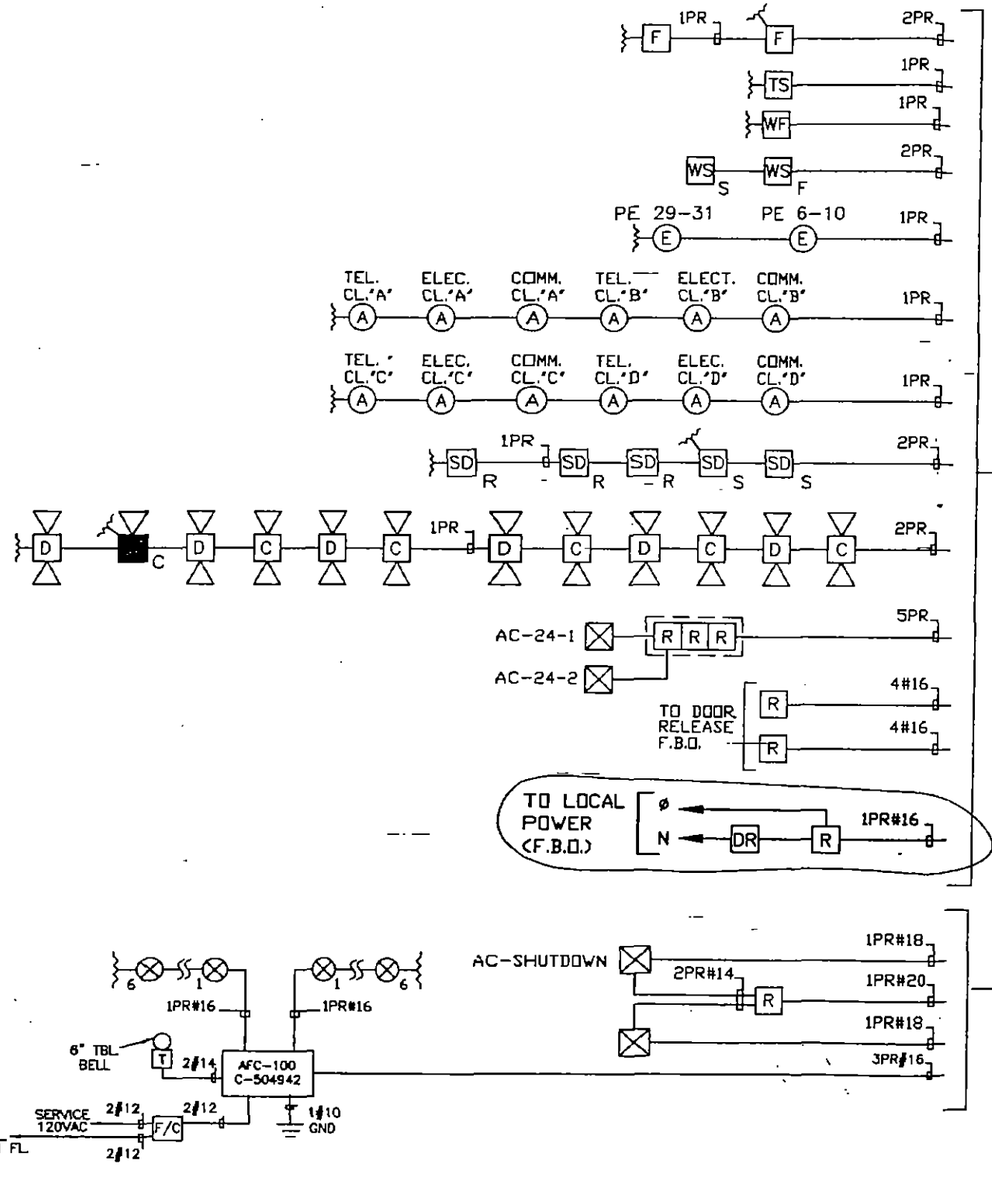

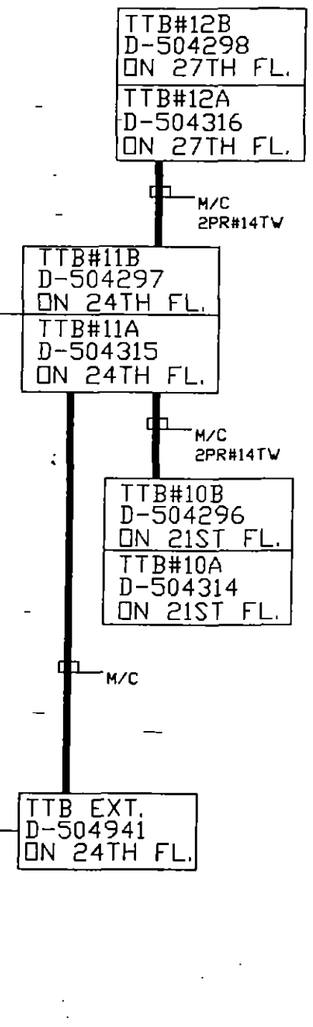

LEGEND

SYMBOL	DESCRIPTION
TTB	TRANSMISSION TERMINAL BOX
⊗	STROBE LIGHT
▷□⊗	COMB. SPKR/STROBE
▷□	SPEAKER
A	AREA SMOKE DETECTOR
E	ELEVATOR LOBBY DETECTOR
H	HEAT DETECTOR
SD	DUCT SMOKE DETECTOR S = SUPPLY R = RETURN
F/C	FUSE CUT-OUT
⊠	FAN SHUTDOWN
R	RELAY
D	DAMPER
DR	DOOR RELEASE
F	MANUAL STATION
WS	WARDEN STATION S = SURFACE F = FLUSH
⌇	END OF LINE RESISTOR
▶□	STAIR SPEAKER
WF	WATERFLOW SWITCH
TS	TAMPER SWITCH
▷□◁	BI-DIRECTIONAL SPEAKER

REV	DATE	BY	DESCRIPTION
2	09/20/00	JM	ADDED (1) RELAY FOR DOOR RELEASE ON 24TH FL PER LJ-80431
1	09/20/00	JM	RISER REDRAWN. SEE DWG# E-504111-2 SH. 2 FOR REFERENCING PAST REVISIONS.

OFFICE BUILDING
7 WORLD TRADE CENTER
N.Y.C.

CONTRACTOR | ENGINEER

PARTIAL RISER DIAGRAM
24TH FLOOR

FIRECOM, INC.
CASE/ACME
39-27 STREET
WOODSIDE, NEW YORK 11377

DRN	L.H.
APPVD	
ENGR	J.M.
CKD	
DATE	09/20/00
SCALE	N.T.S.
SHEET	1
JOB#	FJ-26840
OF	2
DWG#	E-504111-24
REV	2

24TH FLOOR

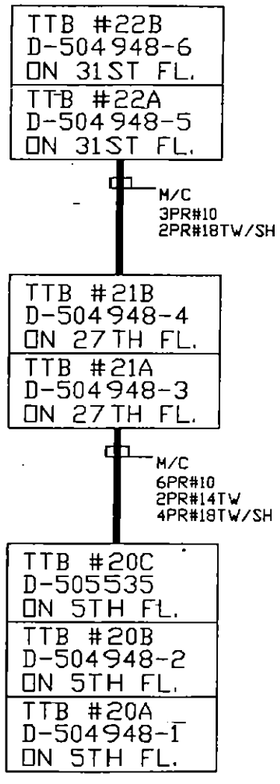

LEGEND

SYMBOL	DESCRIPTION
TTB	TRANSMISSION TERMINAL BOX
⊗	STROBE LIGHT
▷□⊗	COMB. SPKR/STROBE
▷□	SPEAKER F = FLUSH
A	AREA SMOKE DETECTOR
E	ELEVATOR LOBBY DETECTOR
H	HEAT DETECTOR
SD	DUCT SMOKE DETECTOR S = SUPPLY R = RETURN
F/C	FUSE CUT-OUT
⊠	FAN SHUTDOWN
R	RELAY
D	DAMPER
DR	DOOR RELEASE
F	MANUAL STATION
WS	WARDEN STATION S = SURFACE F = FLUSH
⊣	END OF LINE RESISTOR
▶□	STAIR SPEAKER
WF	WATERFLOW SWITCH
TS	TAMPER SWITCH
J	JUNCTION BOX
CD	COMBINATION SMOKE & HEAT DETECTOR

24TH FLOOR

REV	DATE	BY	DESCRIPTION
1	09/20/00	JM	RISER REDRAWN. SEE DWG# E-504111-3 SH. 3 FOR REFERENCING PAST REVISIONS.

OFFICE BUILDING
7 WORLD TRADE CENTER
N.Y.C.

CONTRACTOR | ENGINEER

PARTIAL RISER DIAGRAM
24TH FLOOR

DRN	L.H.
APPVD	
ENGR	J.M.
CKD	
DATE	09/20/00
SCALE	N.T.S.
SHEET	2
OF	2
REV	1

FIRECOM, INC.
CASE/ATLAS
30-27 STREET
WOODSIDE, NEW YORK 11377

JOB# FJ-26840
DWG# B-504111-24

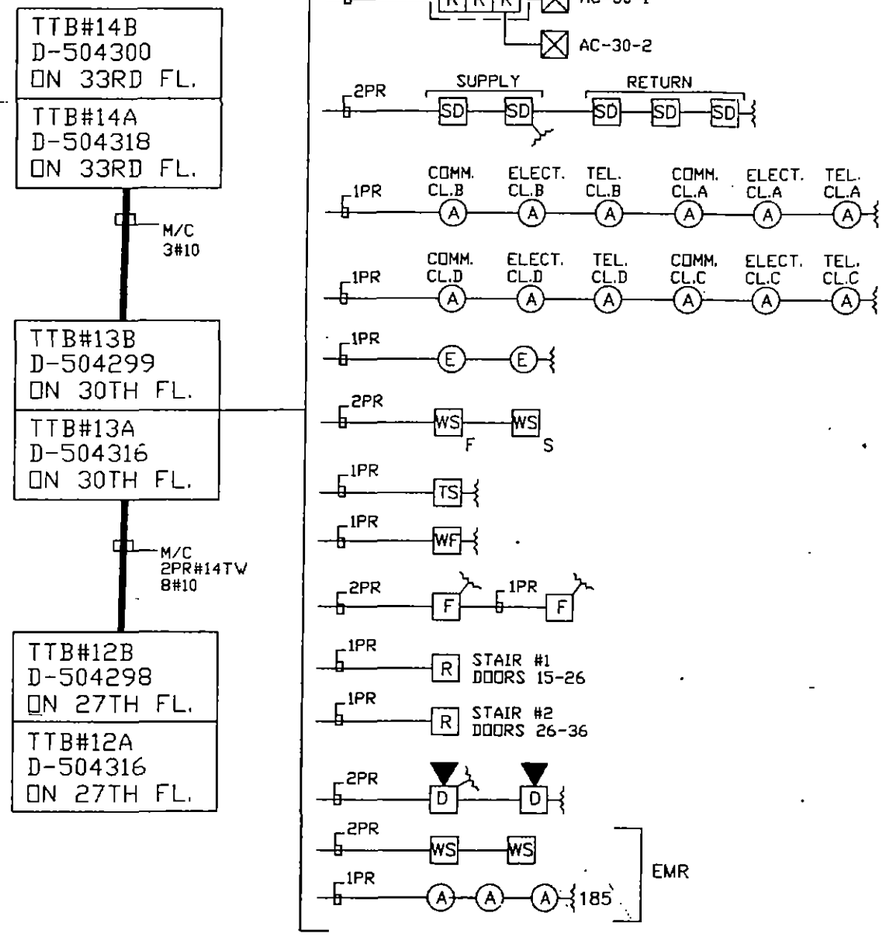

LEGEND

SYMBOL	DESCRIPTION
TTB	TRANSMISSION TERMINAL BOX
⊗	STROBE LIGHT
▷□⊗	COMB. SPKR/STROBE
▷□	SPEAKER F = FLUSH
A	AREA SMOKE DETECTOR
E	ELEVATOR LOBBY DETECTOR F = FLUSH
H	HEAT DETECTOR
SD	DUCT SMOKE DETECTOR S = SUPPLY R = RETURN
F/C	FUSE CUT-OUT
⊠	FAN SHUTDOWN
R	RELAY
D	DAMPER
DR	DOOR RELEASE
F	MANUAL STATION
WS	WARDEN STATION S = SURFACE F = FLUSH
∿	END OF LINE RESISTOR
▶□	STAIR SPEAKER
WF	WATERFLOW SWITCH
TS	TAMPER SWITCH
▷□◁	BI-DIRECTIONAL SPEAKER
ER	ELEVATOR RECALL JUNCTION BOX
EA	ELEVATOR ADVANCE

MAY 1 8 2000

REV	DATE	BY	DESCRIPTION
1	05/16/00	JM	RISER REDRAWN. SEE DWG# E-504111-3 FOR REFERENCING PAST REVISIONS

OFFICE BUILDING
7 WORLD TRADE CENTER
N.Y.C.

CONTRACTOR | ENGINEER

PARTIAL RISER DIAGRAM
30TH FLOOR
"SILVERSTEIN"

FIRECOM, INC.
CASE/ACME
36-27 STREET
WOODSIDE, NEW YORK 11377

DRN	L.H.
APPVD	
ENGR	J.M.
CKD	
DATE	05/16/00
SCALE	N.T.S.
SHEET	1
OF	2
JOB#	FJ-26840
DWG#	E-504111-30
REV	1

30TH FLOOR

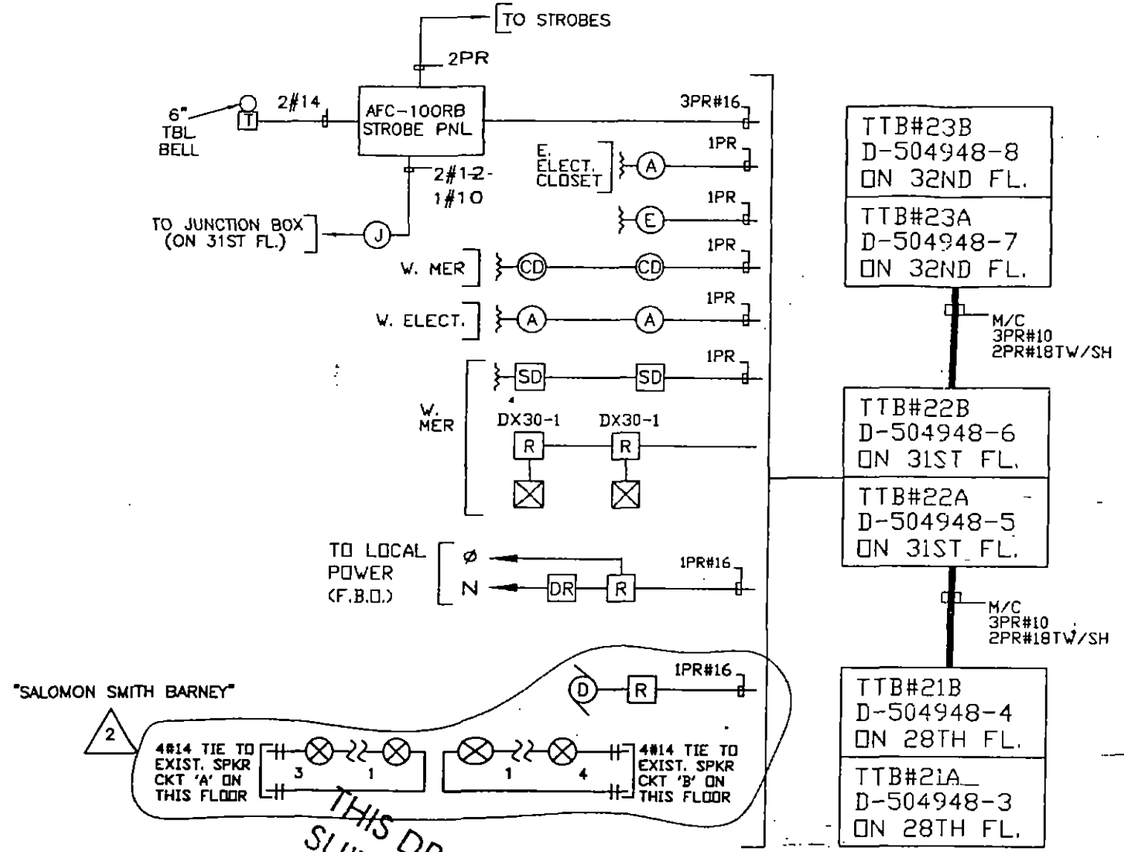

LEGEND	
SYMBOL	DESCRIPTION
TTB	TRANSMISSION TERMINAL BOX
⊗	STROBE LIGHT
▷□⊗	COMB. SPKR/STROBE
▷□	SPEAKER F = FLUSH
A	AREA SMOKE DETECTOR
E	ELEVATOR LOBBY DETECTOR F = FLUSH
H	HEAT DETECTOR
SD	DUCT SMOKE DETECTOR S = SUPPLY R = RETURN
F/C	FUSE CUT-OUT
⊠	FAN SHUTDOWN
R	RELAY
D	DAMPER
DR	DOOR RELEASE
F	MANUAL STATION
WS	WARDEN STATION S = SURFACE F = FLUSH
⏦	END OF LINE RESISTOR
▶□	STAIR SPEAKER
WF	WATERFLOW SWITCH
TS	TAMPER SWITCH
▷□◁	BI-DIRECTIONAL SPEAKER
SS	SUB-SYSTEM
CD	COMBINATION SMOKE & HEAT DETECTOR
J	JUNCTION BOX

THIS DRAWING IS NOT SUITABLE FOR FILING WITH THE NYC FIRE DEPT. OR BUILDING DEPT.

MAY 1 8 2000

REV	DATE	BY	DESCRIPTION
2	05/16/00	JM	ADDED (1) RELAY DAMPER CONTROL & (6) STROBES. REPLACED (1) EXIST. STRB. WITH (1) NEW STRB. FOR 'SALOMON SMITH BARNEY' PER LJ-80228.
1	05/16/00	JM	RISER REDRAWN. SEE DWG# E-504111-3 FOR REFERENCING PAST REVISIONS.

OFFICE BUILDING
7 WORLD TRADE CENTER
N.Y.C.

PARTIAL RISER DIAGRAM
30TH FLOOR
'SALOMON SMITH BARNEY'

DRN	L.H.
APPD	
ENGR	J.M.
CKD	
DATE	05/16/00
SCALE	N.T.S.
SHEET	2
OF	2
REV	2

CONTRACTOR | ENGINEER

FIRECOM, INC.
CASE/ACME
36-37 STREET
WOODSIDE, NEW YORK 11377

JOB# FJ-26840
DWG# B-504111-30

THIS DRAWING IS NOT SUITABLE FOR FILING WITH THE NYC FIRE DEPT. OR BUILDING DEPT.

30TH FLOOR

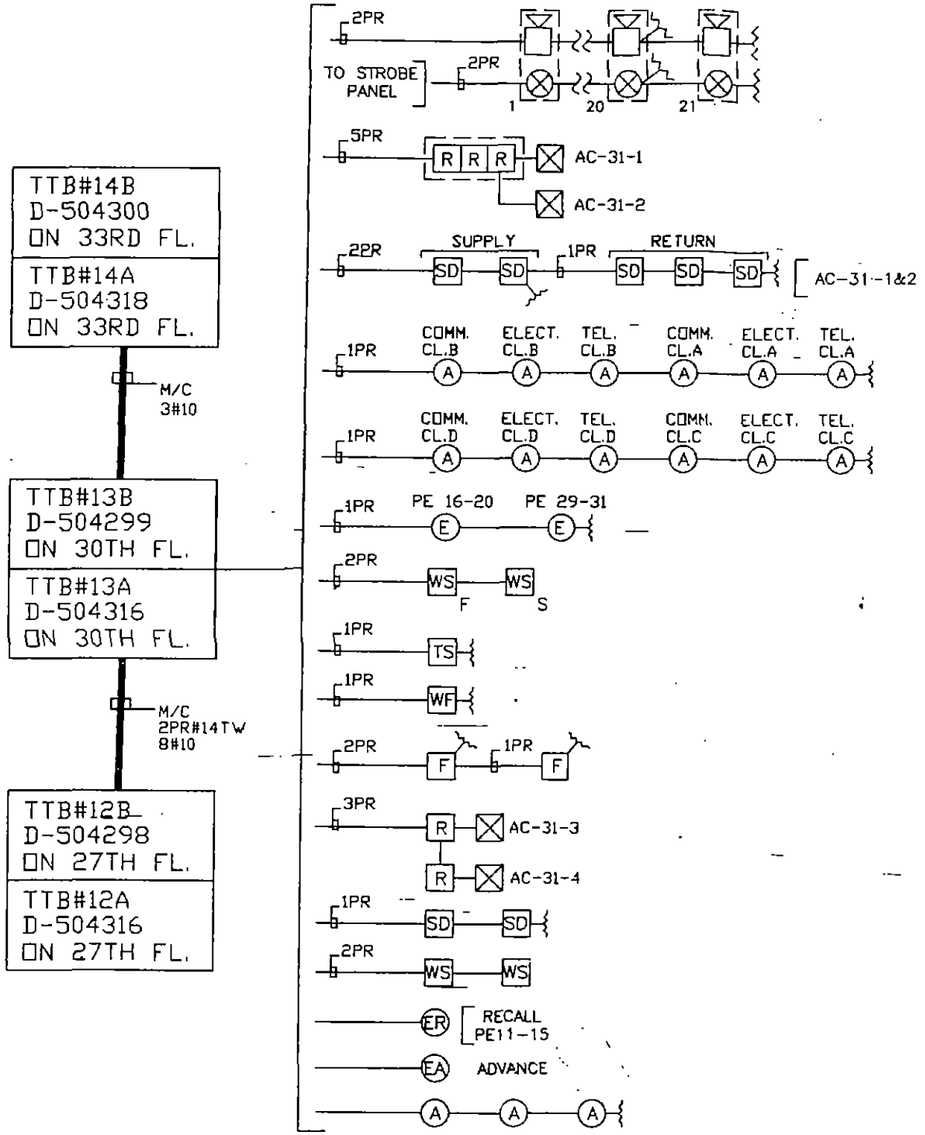

LEGEND	
SYMBOL	DESCRIPTION
TTB	TRANSMISSION TERMINAL BOX
⊗	STROBE LIGHT
▷□⊗	COMB. SPKR/STROBE
▷□	SPEAKER F = FLUSH
(A)	AREA SMOKE DETECTOR
(E)	ELEVATOR LOBBY DETECTOR F = FLUSH
(H)	HEAT DETECTOR
SD	DUCT SMOKE DETECTOR S = SUPPLY R = RETURN
F/C	FUSE CUT-OUT
⊠	FAN SHUTDOWN
R	RELAY
(D)	DAMPER
DR	DOOR RELEASE
F	MANUAL STATION
WS	WARDEN STATION S = SURFACE F = FLUSH
⌇	END OF LINE RESISTOR
▶□	STAIR SPEAKER
WF	WATERFLOW SWITCH
TS	TAMPER SWITCH
▷□◁	BI-DIRECTIONAL SPEAKER
(ER)	ELEVATOR RECALL JUNCTION BOX
(EA)	ELEVATOR ADVANCE

31ST FLOOR

REV	DATE	BY	DESCRIPTION
1	04/26/00	JM	RISER REDRAWN. SEE DWG# E-504111-4 FOR REFERENCING PAST REVISIONS.

OFFICE BUILDING
7 WORLD TRADE CENTER
N.Y.C.

CONTRACTOR | ENGINEER

PARTIAL RISER DIAGRAM
31ST FLOOR
'SILVERSTEIN'

FIRECOM, INC.
CASE/ACME
36-27 STREET
WOODSIDE, NEW YORK 11377

DRWN	L.H.
APPVD	
ENGR	J.M.
CKD	
DATE	04/26/00
SCALE	N.T.S.
SHEET	1
OF	2
REV	1
JOB#	FJ-26840
DWG#	B-504111-31

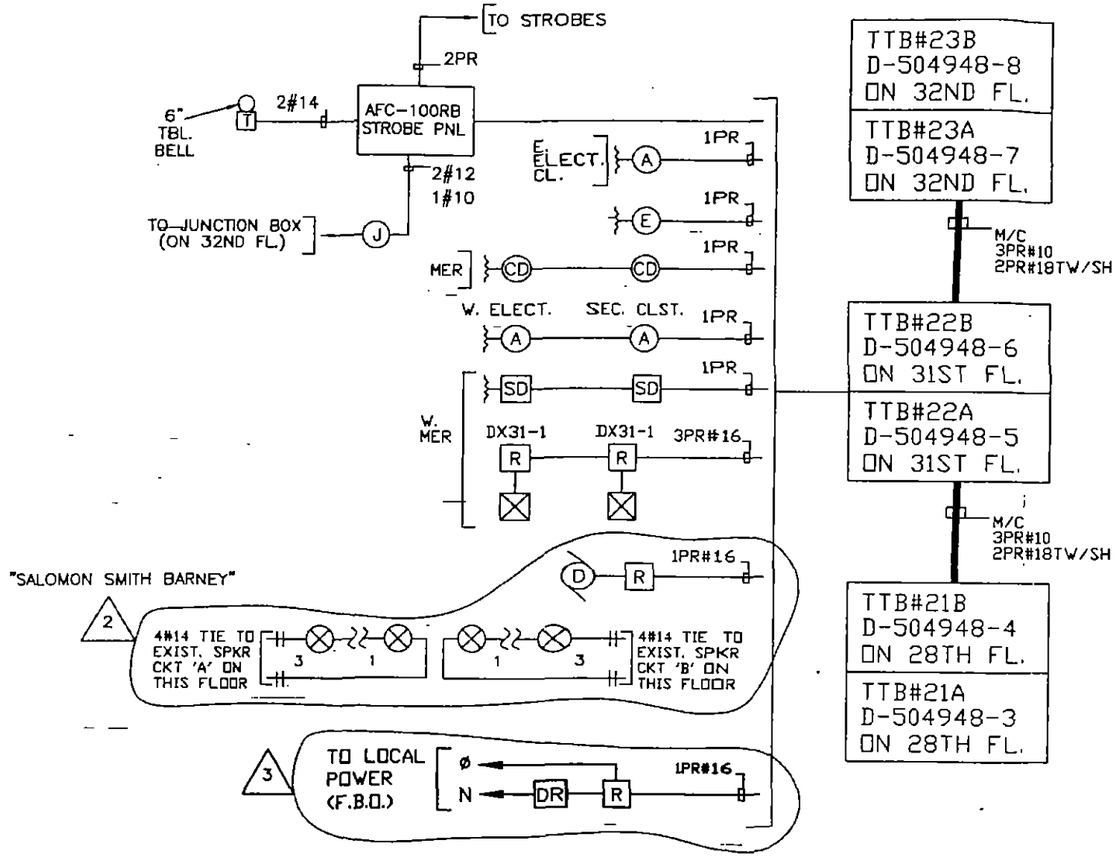

LEGEND

SYMBOL	DESCRIPTION
TTB	TRANSMISSION TERMINAL BOX
⊗	STROBE LIGHT
▷□⊗	COMB. SPKR/STROBE
▷□	SPEAKER F = FLUSH
A	AREA SMOKE DETECTOR
E	ELEVATOR LOBBY DETECTOR F = FLUSH
H	HEAT DETECTOR
SD	DUCT SMOKE DETECTOR S = SUPPLY R = RETURN
F/C	FUSE CUT-OUT
⊠	FAN SHUTDOWN
R	RELAY
D	DAMPER
DR	DOOR RELEASE
F	MANUAL STATION
WS	WARDEN STATION S = SURFACE F = FLUSH
	END OF LINE RESISTOR
▶□	STAIR SPEAKER
WF	WATERFLOW SWITCH
TS	TAMPER SWITCH
▷□◁	BI-DIRECTIONAL SPEAKER
SS	SUB-SYSTEM
CD	COMBINATION SMOKE & HEAT DETECTOR
J	JUNCTION BOX

REV	DATE	BY	DESCRIPTION
3	05/05/00	JM	ADDED (1) RELAY FOR DOOR RELEASE ON 31ST FL. PER LJ-80208.
2	04/26/00	JM	ADDED (6) STROBES & (1) RELAY FOR DAMPER CONTROL FOR "SALOMON SMITH BARNEY" PER LJ-80205.
1	04/26/00	JM	RISER REDRAWN. SEE DWG# E-504111-4 FOR REFERENCING PAST REVISIONS.

OFFICE BUILDING
7 WORLD TRADE CENTER
N.Y.C.

CONTRACTOR | ENGINEER

PARTIAL RISER DIAGRAM
31ST FLOOR
"SALOMON SMITH BARNEY"

FIRECOM, INC.
CASE/ACME
39-27 STREET
WOODSIDE, NEW YORK 11377

DSN	L.H.
APPVD	
ENGR	J.M.
CKD	
DATE	04/26/00
SCALE	N.T.S.
SHEET	2
OF	2
JOB #	FJ-26840
DWG #	B-504111-31
REV	3

31ST FLOOR

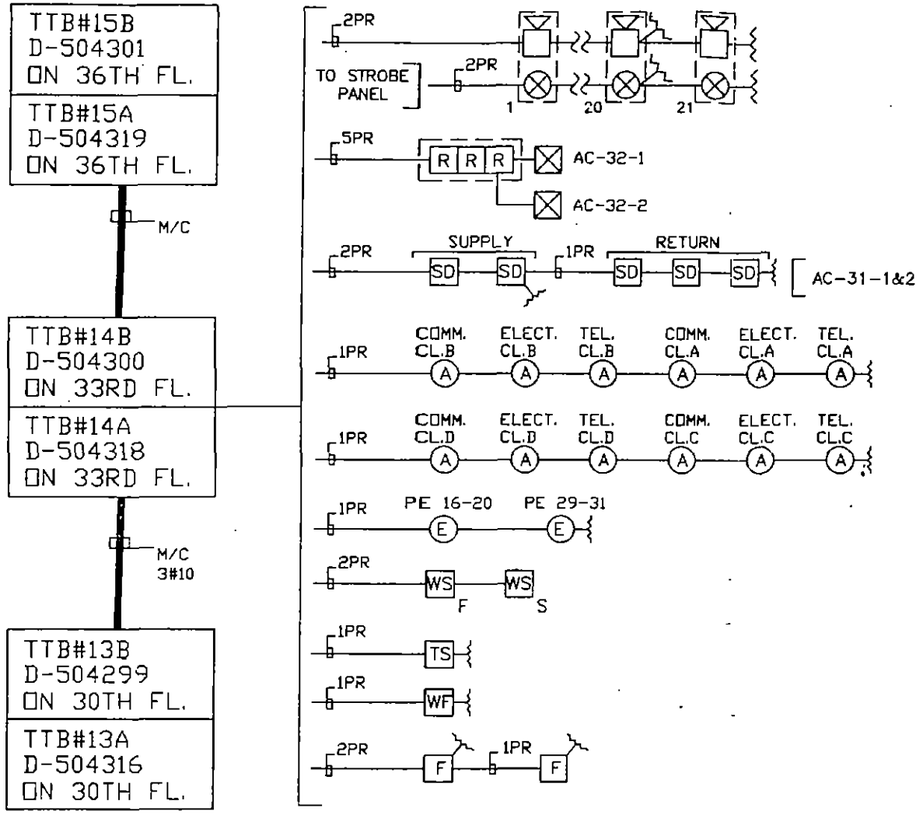

LEGEND

SYMBOL	DESCRIPTION
TTB	TRANSMISSION TERMINAL BOX
⊗	STROBE LIGHT
▷□⊗	COMB. SPKR/STROBE
▷□	SPEAKER F = FLUSH
A	AREA SMOKE DETECTOR
E	ELEVATOR LOBBY DETECTOR F = FLUSH
H	HEAT DETECTOR
SD	DUCT SMOKE DETECTOR S = SUPPLY R = RETURN
F/C	FUSE CUT-OUT
⊠	FAN SHUTDOWN
R	RELAY
D	DAMPER
DR	DOOR RELEASE
F	MANUAL STATION
WS	WARDEN STATION S = SURFACE F = FLUSH
	END OF LINE RESISTOR
▶□	STAIR SPEAKER
WF	WATERFLOW SWITCH
TS	TAMPER SWITCH
▷-◁	BI-DIRECTIONAL SPEAKER
ER	ELEVATOR RECALL JUNCTION BOX
EA	ELEVATOR ADVANCE

32ND FLOOR

REV	DATE	BY	DESCRIPTION
1	04/26/00	JM	RISER REDRAWN. SEE DWG# E-504111-4 FOR REFERENCING PAST REVISIONS.

OFFICE BUILDING
7 WORLD TRADE CENTER
N.Y.C.

CONTRACTOR | ENGINEER

PARTIAL RISER DIAGRAM
32ND FLOOR
'SILVERSTEIN'

DRN	L.H.
APP'D	
ENGR	J.M.
CKD	
DATE	04/27/00
SCALE	N.T.S.
SHEET	1
OF	2
REV	1

FIRECOM, INC.
CASE/ACME
38-27 STREET
WOODSIDE, NEW YORK 11377

JOB# FJ-26840
DWG# B-504111-32

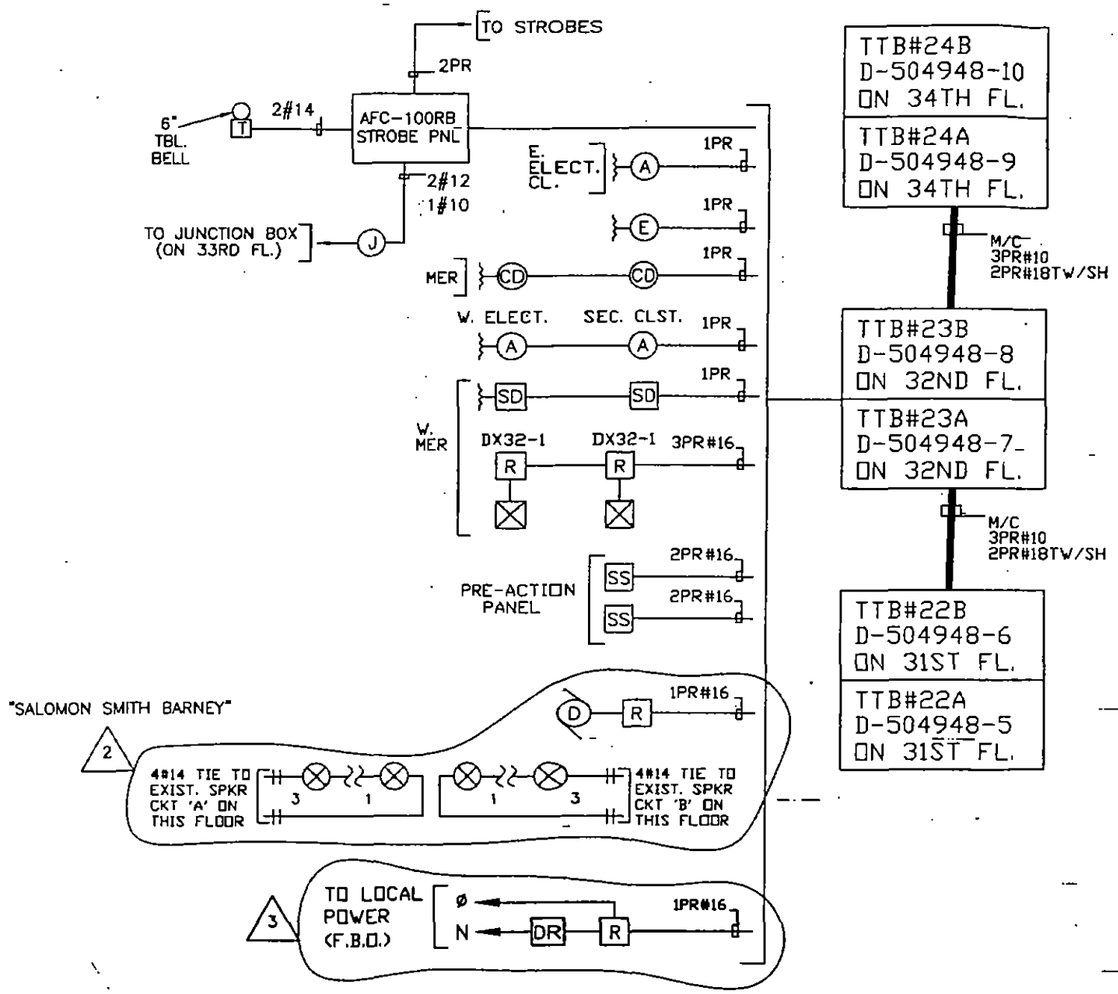

LEGEND

SYMBOL	DESCRIPTION
TTB	TRANSMISSION TERMINAL BOX
	STROBE LIGHT
	COMB. SPKR/STROBE
	SPEAKER F = FLUSH
A	AREA SMOKE DETECTOR
E	ELEVATOR LOBBY DETECTOR F = FLUSH
H	HEAT DETECTOR
SD	DUCT SMOKE DETECTOR S = SUPPLY R = RETURN
F/C	FUSE CUT-OUT
	FAN SHUTDOWN
R	RELAY
D	DAMPER
DR	DOOR RELEASE
F	MANUAL STATION
WS	WARDEN STATION S = SURFACE F = FLUSH
	END OF LINE RESISTOR
	STAIR SPEAKER
WF	WATERFLOW SWITCH
TS	TAMPER SWITCH
	BI-DIRECTIONAL SPEAKER
SS	SUB-SYSTEM
CD	COMBINATION SMOKE & HEAT DETECTOR
J	JUNCTION BOX

REV	DATE	BY	DESCRIPTION
3	05/05/00	JM	ADDED (1) RELAY FOR DOOR RELEASE ON 32ND FL. PER LJ-80208.
2	04/26/00	JM	ADDED (6) STROBES & (1) RELAY FOR DAMPER CONTROL FOR "SALOMON SMITH BARNEY" PER LJ-80204.
1	04/26/00	JM	RISER REDRAWN. SEE DWG# E-504111-4 FOR REFERENCING PAST REVISIONS.

OFFICE BUILDING
7 WORLD TRADE CENTER
N.Y.C.

DRN: L.H.
APPRD:
ENGR: J.M.
CKD:
DATE: 04/27/00
SCALE: N.T.S.
SHEET: 2
OF: 2
REV: 3

CONTRACTOR | ENGINEER

PARTIAL RISER DIAGRAM
32ND FLOOR
"SALOMON SMITH BARNEY"

FIRECOM, INC.
CASE/ACME
38-37 STREET
WOODSIDE, NEW YORK 11377

JOB# FJ-26840
DWG# B-504111-32

32ND FLOOR

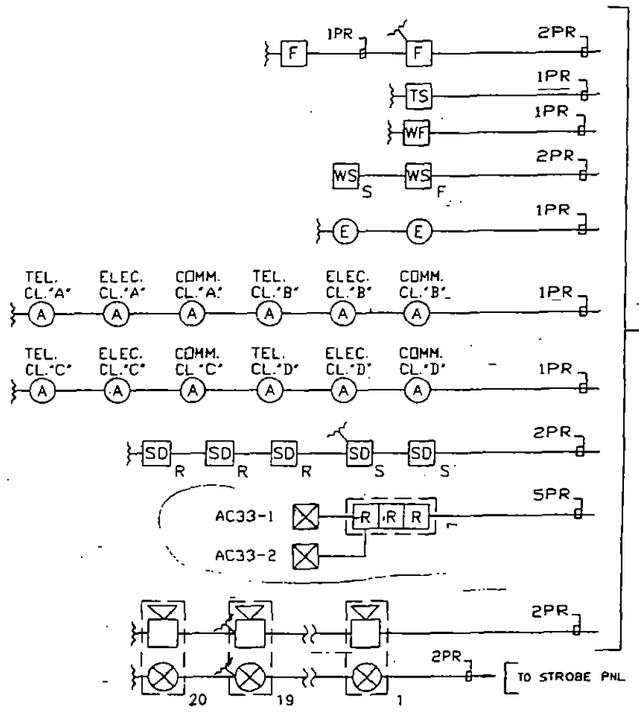

TTB#14B
D-504300
ON THIS FL.

TTB#14A
D-504318
ON THIS FL.

33RD FLOOR

LEGEND

SYMBOL	DESCRIPTION
TTB	TRANSMISSION TERMINAL BOX
⊗	STROBE LIGHT
▷□⊗	COMB. SPKR/STROBE
▷□	SPEAKER F = FLUSH
A	AREA SMOKE DETECTOR
E	ELEVATOR LOBBY DETECTOR
H	HEAT DETECTOR
SD	DUCT SMOKE DETECTOR S = SUPPLY R = RETURN
F/C	FUSE CUT-OUT
⊠	FAN SHUTDOWN
R	RELAY
D	DAMPER
DR	DOOR RELEASE
F	MANUAL STATION
WS	WARDEN STATION S = SURFACE F = FLUSH
	END OF LINE RESISTOR
▶□	STAIR SPEAKER
WF	WATERFLOW SWITCH
TS	TAMPER SWITCH

REV	DATE	BY	DESCRIPTION
1	9/13/99	C.S.	RISER REDRAWN.. SEE DWG# E-504111-4 SH. 4 FOR REFERENCING PAST REVISIONS.

OFFICE BUILDING
7 WORLD TRADE CENTER
N.Y.C.

CONTRACTOR | ENGINEER

~~PARTIAL RISER DIAGRAM~~
33RD FLOOR

FIRECOM, INC.
CASE/ACME
36-37 STREET
WOODSIDE, NEW YORK 11377

DWN	L.H.
APPVD	
ENGR	C.S.
CKD	
DATE	9/13/99
SCALE	N.T.S.
SHEET	1
OF	2
JOB#	FJ-26840
DWG#	E-504111-33
REV	1

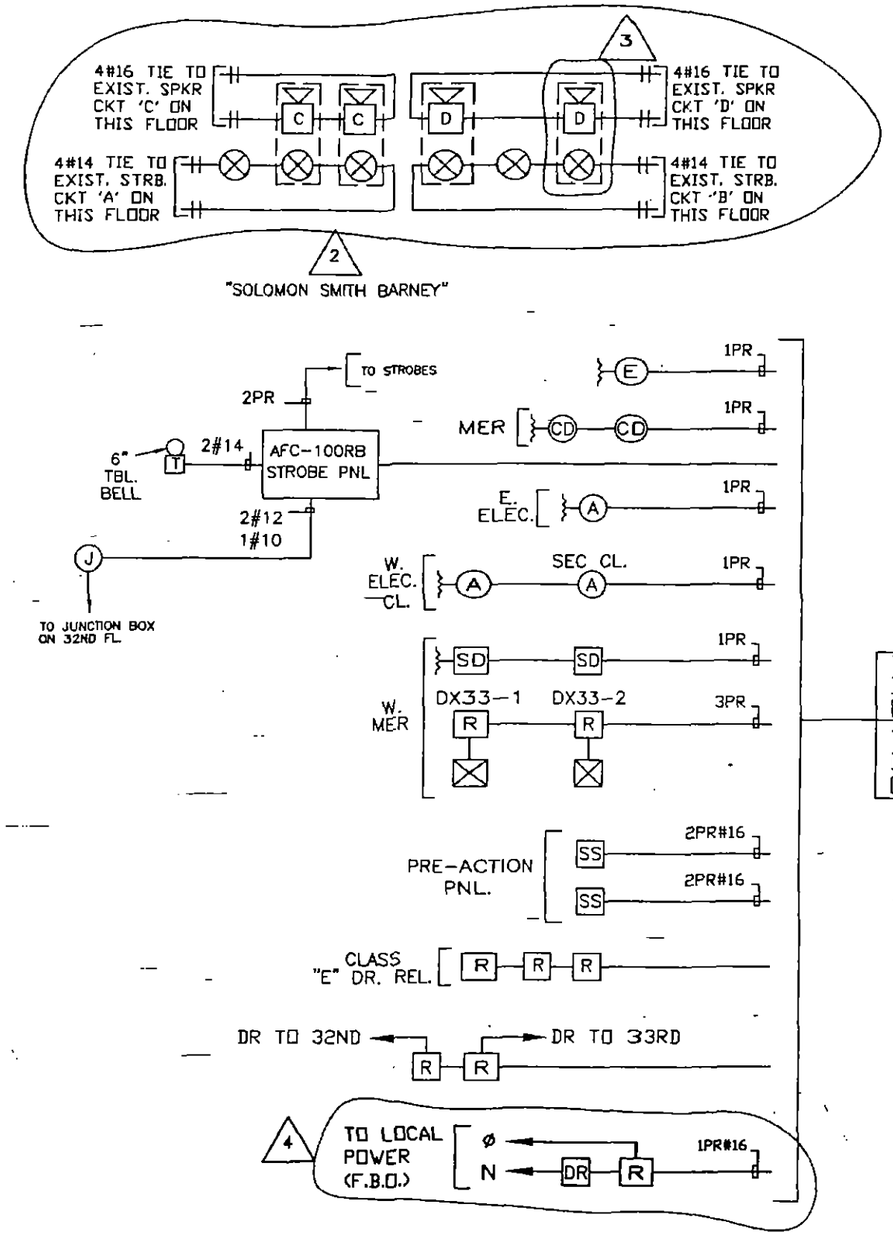

TTB#23B
D-504948-8
ON 32ND FL.

TTB#23A
D-504948-7
ON 32ND FL.

LEGEND

SYMBOL	DESCRIPTION
TTB	TRANSMISSION TERMINAL BOX
⊗	STROBE LIGHT
▷□⊗	COMB. SPKR/STROBE
▷□	SPEAKER
A	AREA SMOKE DETECTOR
E	ELEVATOR LOBBY DETECTOR
H	HEAT DETECTOR
SD	DUCT SMOKE DETECTOR
F/C	FUSE CUT-OUT
⊠	FAN SHUTDOWN
R	RELAY
D	DAMPER
DR	DOOR RELEASE
F	MANUAL STATION
WS	WARDEN STATION
≈	END OF LINE RESISTOR
▶□	STAIR SPEAKER
WF	WATERFLOW SWITCH
TS	TAMPER SWITCH
J	JUNCTION BOX
CD	COMBINATION SMOKE & HEAT DETECTOR
SS	SUB-SYSTEM

REV	DATE	BY	DESCRIPTION
4	05/05/00	J.M.	ADDED (1) RELAY FOR DOOR RELEASE ON 33RD FL. PER LJ-80208.
3	12/2/99	J.M.	ADDED (1) SPKR./STRB. ON 33RD FL. FOR 'SOLOMON SMITH BARNEY' PER FJ-65307-01.
2	9/13/99	C.S.	ADDED (3) SPKR./STRBS. & (2) STROBES FOR 'SOLOMON SMITH BARNEY' PER FJ-65307.
1	9/13/99	C.S.	RISER REDRAWN. SEE DWG# E-504111-4 SH. 4 FOR REFERENCING PAST REVISIONS.

OFFICE BUILDING
7 WORLD TRADE CENTER
N.Y.C.

CONTRACTOR | ENGINEER

PARTIAL RISER DIAGRAM
33RD FLOOR

FIRECOM, INC. CASE/ACME
38-27 STREET
WOODSIDE, NEW YORK 11377

DRN	L.H.
APPVD	
ENGR	C.S.
CKD	
DATE	9/13/99
SCALE	N.T.S.
SHEET	2
JOB#	FJ-26840
OF	2
DWG#	B-504111-33
REV	4

33RD FLOOR

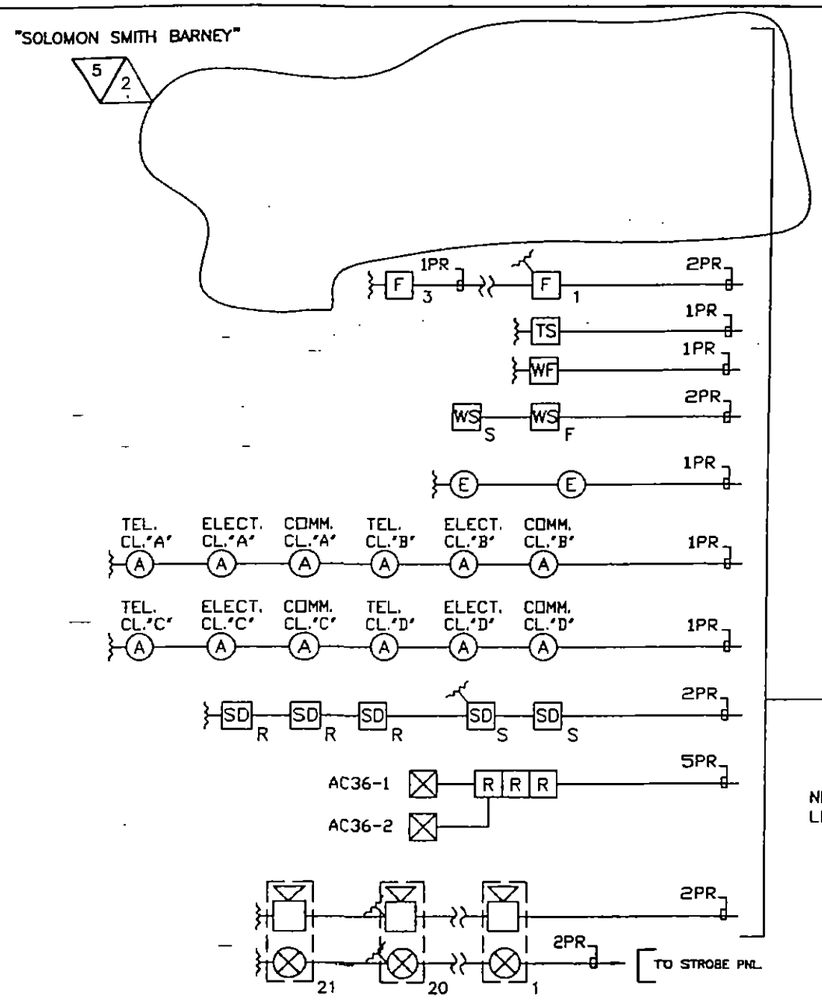

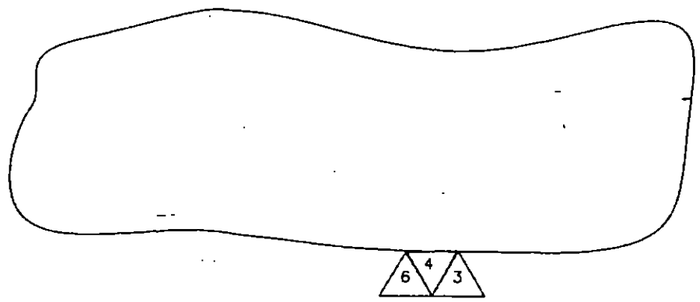

TTB#15B
D-504301
ON 36TH FL.

TTB#15A
D-504319
ON 36TH FL.

NEW LOCATION

LEGEND	
SYMBOL	DESCRIPTION
TTB	TRANSMISSION TERMINAL BOX
⊗	STROBE LIGHT
▷□⊗	COMB. SPKR/STROBE
▷□	SPEAKER F = FLUSH
A	AREA SMOKE DETECTOR
E	ELEVATOR LOBBY DETECTOR
H	HEAT DETECTOR
SD	DUCT SMOKE DETECTOR S = SUPPLY R = RETURN
F/C	FUSE CUT-OUT
⊠	FAN SHUTDOWN
R	RELAY
D	DAMPER
DR	DOOR RELEASE
F	MANUAL STATION
WS	WARDEN STATION S = SURFACE F = FLUSH
	END OF LINE RESISTOR
▶□	STAIR SPEAKER
WF	WATERFLOW SWITCH
TS	TAMPER SWITCH

REV	DATE	BY	DESCRIPTION
6	06/08/00	JM	TRANFERRED (4) SPKR./STRBS. FROM SH.1 TO SH. 2 PER FIELD CONDITIONS
5	9/23/99	CS	DELETED (2) AREA SMK. DETS., (1) DUCT SMK. DETS., (1) RELAY FOR FAN SHUTDOWN, (1) PRE-ACTION PNL. & (1) STRB. FROM TTB #15 D-504319 & TRANSFERRED TO TTB #25B D-505652. DELETED (1) MANUAL STATION FROM TTB #15 D-504319 & TRANSFERRED TO TTB #25A D-504948-11 PER FJ-65149.
4	9/23/99	CS	CORRECTED FLOOR PAGE CKTS. FROM 'A' & 'B' TO 'C' & 'D' PER FIELD CONDITIONS.
3	6/25/99	CS	ADDED (4) SPKR./STRBS. ON 36TH FL. FOR 'SOLOMON SMITH BARNEY' PER FJ-65150.
2	6/24/99	CS	ADDED (2) AREA SMK. DETS., (1) DUCT SMK. DET., (1) RELAY FOR FAN SHUTDOWN, (1) MANUAL PULL STATION, (1) PRE-ACTION PNL. & (1) STRB. ON 36TH FL. FOR 'SOLOMON SMITH BARNEY' PER FJ-65149.
1	6/24/99	CS	RISER REDRAWN. SEE DWG# E-504111-4 SH. 4 FOR REFERENCING PAST REVISIONS.

OFFICE BUILDING
7 WORLD TRADE CENTER
N.Y.C.

CONTRACTOR | ENGINEER

PARTIAL RISER DIAGRAM
36TH FLOOR

FIRECOM, INC.
CASE/ATLAS
39-27 STREET
WOODSIDE, NEW YORK 11377

DRWN	L.H.
APP'D	
ENGR	C.S.
CKD	
DATE	6/24/99
SCALE	N.T.S.
SHEET	1
JOB#	FJ-26840
OF	2
DWG#	B-504111-36
REV	6

36TH FLOOR

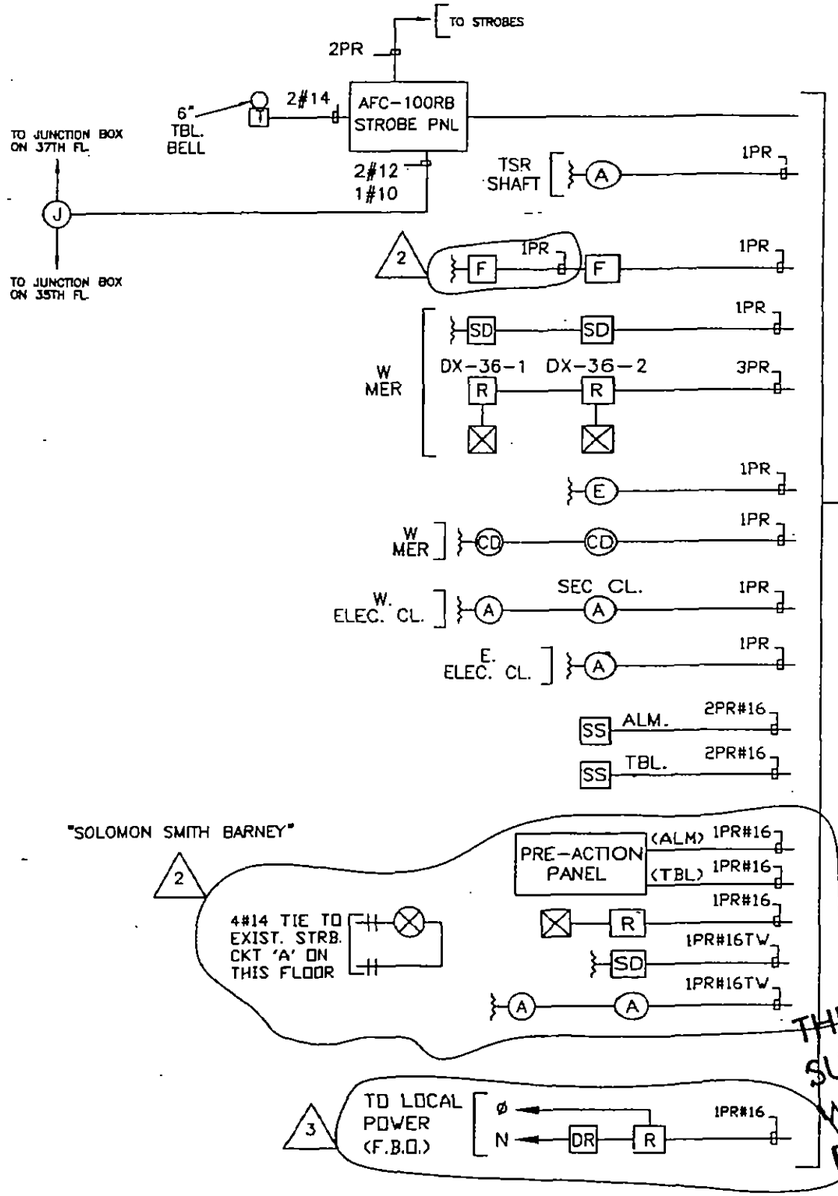

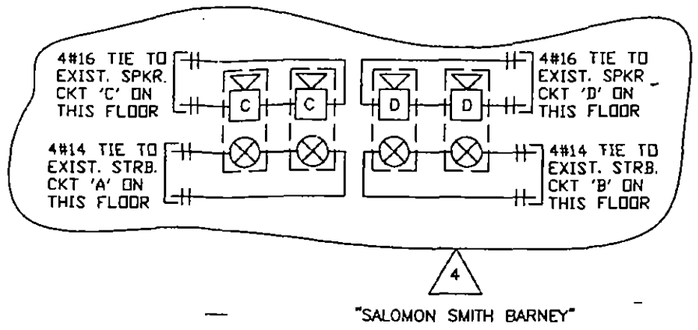

TTB#25B
D-505652
ON 37TH FL.

TTB#25A
D-504948-11
ON 37TH FL.

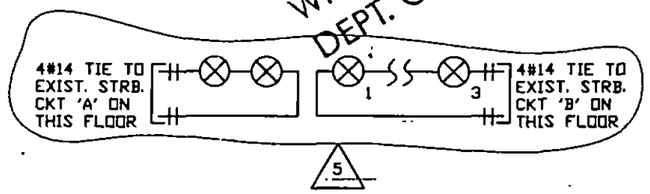

THIS DRAWING IS NOT SUITABLE FOR FILING WITH THE NYC FIRE DEPT. OR BUILDING DEPT.

JUN 0 9 2000

THIS DRAWING IS NOT SUITABLE FOR FILING WITH THE NYC FIRE DEPT. OR BUILDING DEPT.

36TH FLOOR

LEGEND

SYMBOL	DESCRIPTION
TTB	TRANSMISSION TERMINAL BOX
⊗	STROBE LIGHT
▷□⊗	COMB. SPKR/STROBE
▷□	SPEAKER F = FLUSH
A	AREA SMOKE DETECTOR
E	ELEVATOR LOBBY DETECTOR
H	HEAT DETECTOR
SD	DUCT SMOKE DETECTOR S = SUPPLY R = RETURN
F/C	FUSE CUT-OUT
⊠	FAN SHUTDOWN
R	RELAY
D	DAMPER
DR	DOOR RELEASE
F	MANUAL STATION
WS	WARDEN STATION S = SURFACE F = FLUSH
	END OF LINE RESISTOR
▶□	STAIR SPEAKER
WF	WATERFLOW SWITCH
TS	TAMPER SWITCH
J	JUNCTION BOX
CD	COMBINATION SMOKE & HEAT DETECTOR
SS	SUB-SYSTEM

5	06/08/00	JM	ADDED (5) STRBS. FOR 'SALOMON SMITH BARNEY' PER LJ-80277.
4	06/08/00	JM	TRANSFERRED (4) SPKR./STRBS. FROM SH. 1 TO SH. 2 PER FIELD CONDITIONS.
3	05/05/00	JM	ADDED (1) RELAY FOR DOOR RELEASE ON 36TH FL. PER LJ-80208.
2	9/23/99	CS	TRANSFERRED (2) AREA SMK. DETS., (1) DUCT SMK. DETS., (1) RELAY FOR FAN SHUTDOWN, (1) PRE-ACTION PNL. & (1) STRB. FROM TTB#15 D-504319 TO TTB #25B D-505652. TRANSFERRED (1) MANUAL STATION FROM TTB#15 D-504319 TO TTB #25A D-504948-11 PER FJ-65149.
1	6/24/99	CS	RISER REDRAWN. SEE DWG# E-504111-4 SH. 4 FOR REFERENCING PAST REVISIONS.

REV	DATE	BY	DESCRIPTION

OFFICE BUILDING
7 WORLD TRADE CENTER
N.Y.C.

CONTRACTOR | ENGINEER

PARTIAL RISER DIAGRAM
36TH FLOOR

FIRECOM, INC.
CASH/ACME
38-17 STREET
WOODSIDE, NEW YORK 11377

DSN	L.H.
APPVD	
ENGR	C.S.
CKD	
DATE	6/24/99
SCALE	N.T.S.
SHEET	2
JOB#	FJ-26840
OF	2
DWG#	B-504111-36
REV	5

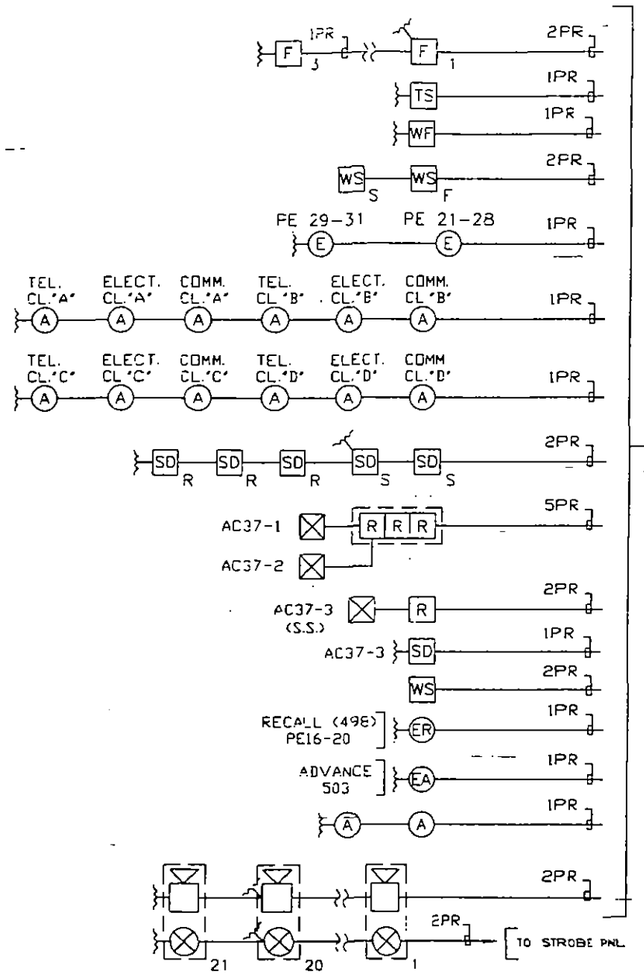

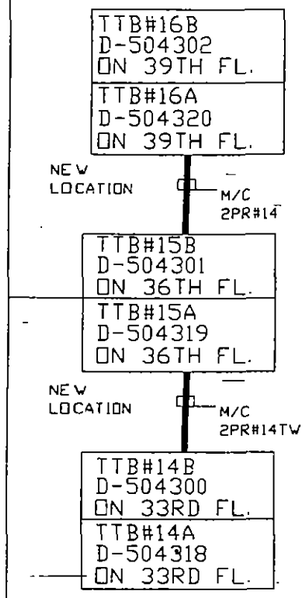

LEGEND

SYMBOL	DESCRIPTION
TTB	TRANSMISSION TERMINAL BOX
⊗	STROBE LIGHT
▷□⊗	COMB. SPKR/STROBE
▷□	SPEAKER F = FLUSH
A	AREA SMOKE DETECTOR
E	ELEVATOR LOBBY DETECTOR
H	HEAT DETECTOR
SD	DUCT SMOKE DETECTOR S = SUPPLY R = RETURN
F/C	FUSE CUT-OUT
⊠	FAN SHUTDOWN
R	RELAY
D	DAMPER
DR	DOOR RELEASE
F	MANUAL STATION
WS	WARDEN STATION S = SURFACE F = FLUSH
⌇	END OF LINE RESISTOR
▶□	STAIR SPEAKER
WF	WATERFLOW SWITCH
TS	TAMPER SWITCH
ER	ELEVATOR RECALL JUNCTION BOX
SS	SUB-SYSTEM
EA	ELEVATOR ADVANCE

REV	DATE	BY	DESCRIPTION
1	6/24/99	C.S.	RISER REDRAWN. SEE DWG# E-504111-4 SH. 4 FOR REFERENCING PAST REVISIONS.

OFFICE BUILDING
7 WORLD TRADE CENTER
N.Y.C.

CONTRACTOR | ENGINEER

PARTIAL RISER DIAGRAM
37TH FLOOR

FIRECOM, INC.
CASE/ACME
30-27 STREET
WOODSIDE, NEW YORK 11377

DWN	L.H.
APPVD	
ENGR	C.S.
CKD	
DATE	6/24/99
SCALE	N.T.S.
SHEET	1
OF	2
REV	1
JOB#	FJ-26840
DWG#	B-504111-37

37TH FLOOR

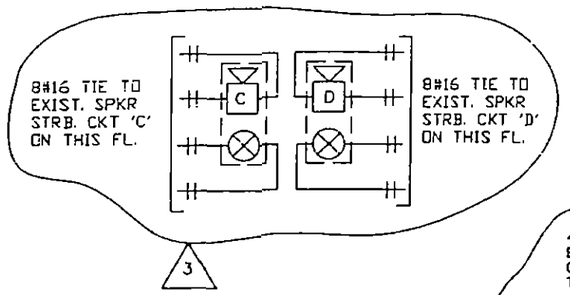

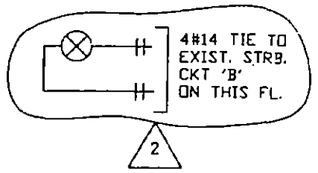

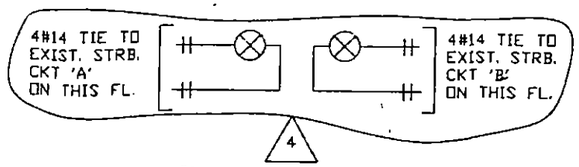

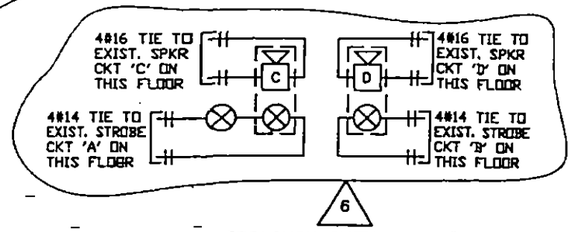

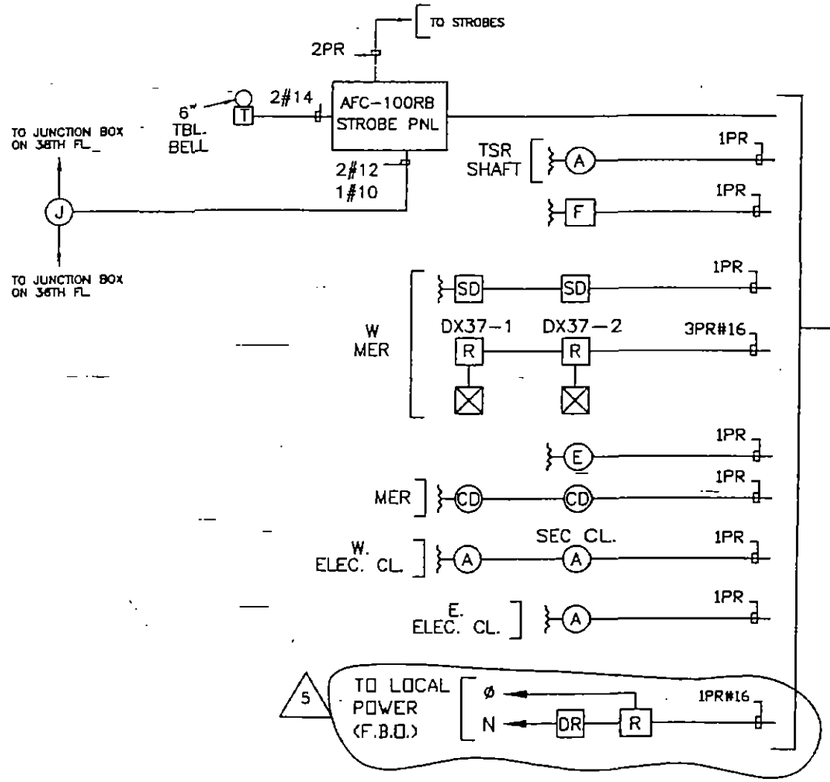

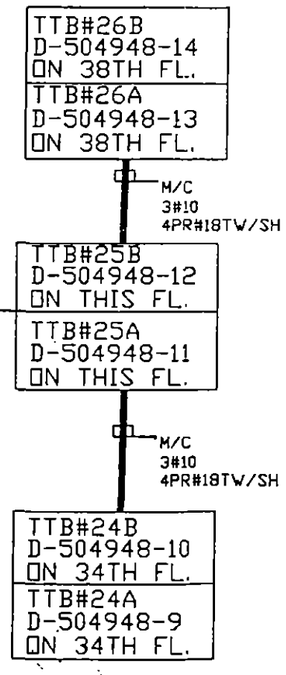

LEGEND

SYMBOL	DESCRIPTION
TTB	TRANSMISSION TERMINAL BOX
⊗	STROBE LIGHT
▷□⊗	COMB. SPKR/STROBE
▷□	SPEAKER
A	AREA SMOKE DETECTOR
E	ELEVATOR LOBBY DETECTOR
H	HEAT DETECTOR
SD	DUCT SMOKE DETECTOR
F/C	FUSE CUT-OUT
⊠	FAN SHUTDOWN
R	RELAY
D	DAMPER
DR	DOOR RELEASE
F	MANUAL STATION
WS	WARDEN STATION
∿	END OF LINE RESISTOR
▶□	STAIR SPEAKER
WF	WATERFLOW SWITCH
TS	TAMPER SWITCH
J	JUNCTION BOX
CD	COMBINATION SMOKE & HEAT DETECTOR

6	09/11/00	JM	ADDED (2) SPKR./STRBS., (1) STROBE FOR 'SALOMON SMITH BARNEY' PER LJ-80417.
5	05/05/00	JM	ADDED (1) RELAY FOR DOOR RELEASE ON 37TH FL. PER LJ-80208.
4	7/2/99	CS	ADDED (2) STROBES ON 37TH FL FOR 'SOLOMON SMITH BARNEY' PER FJ-65204.
3	7/2/99	CS	CORRECTED FLOOR PAGE CKTS. FROM 'A & 'B' TO 'C' & 'D' PER FIELD CONDITIONS.
2	6/24/99	CS	ADDED (1) STROBE ON 37TH FL FOR 'SOLOMON SMITH BARNEY' PER FJ-65147.
1	6/24/99	CS	RISER REDRAWN. SEE DWG# E-504111-4 SH. 4 FOR REFERENCING PAST REVISIONS.

REV	DATE	BY	DESCRIPTION

OFFICE BUILDING
7 WORLD TRADE CENTER
N.Y.C.

DRN: L.H.
APPVD:
ENGR: C.S.
CKD:
CONTRACTOR: ENGINEER:
DATE: 6/24/99
SCALE: N.T.S.

PARTIAL RISER DIAGRAM
37TH FLOOR

SHEET: 2
OF: 2
REV: 6

FIRECOM, INC.
CASE/ACME
38-27 STREET
WOODSIDE, NEW YORK 11377

JOB# FJ-26840
DWG# B-504111-37.

37TH FLOOR

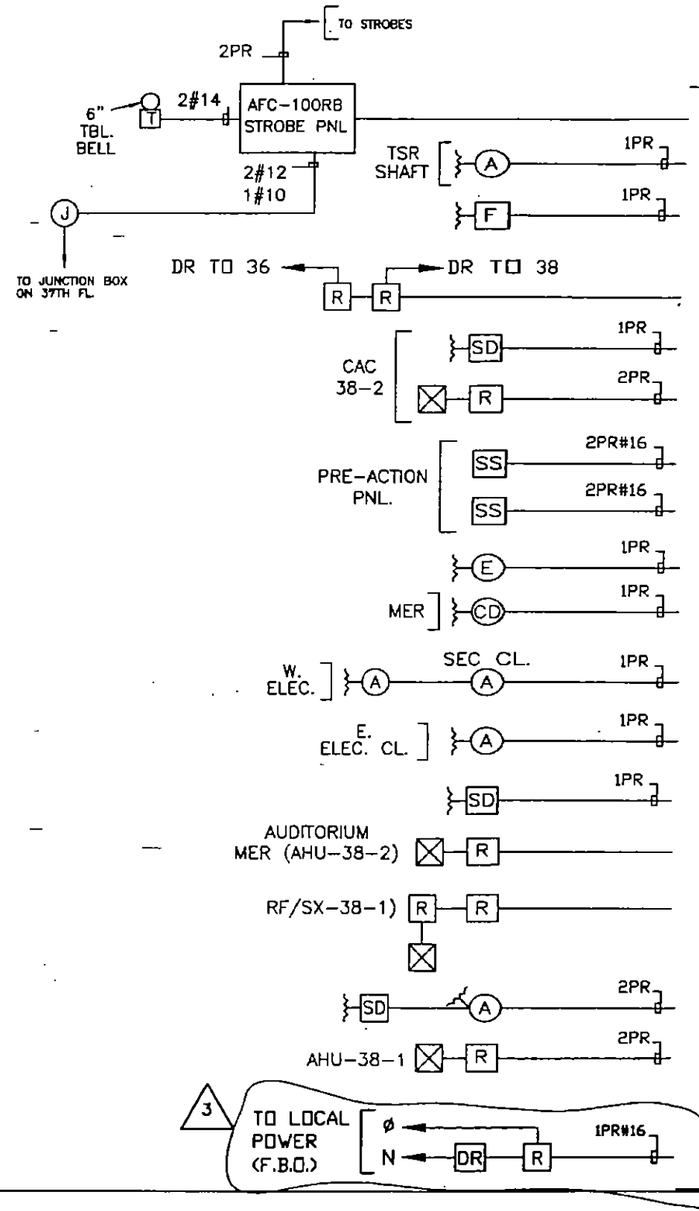

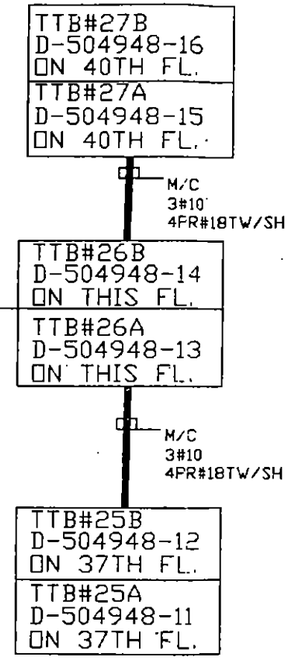

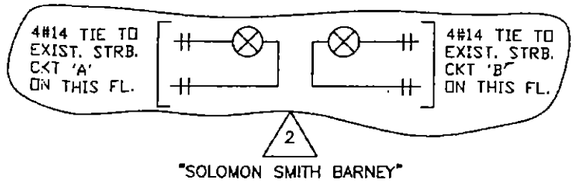

LEGEND

SYMBOL	DESCRIPTION
TTB	TRANSMISSION TERMINAL BOX
⊗	STROBE LIGHT
▷□⊗	COMB. SPKR/STROBE
▷□	SPEAKER
A	AREA SMOKE DETECTOR
E	ELEVATOR LOBBY DETECTOR
H	HEAT DETECTOR
SD	DUCT SMOKE DETECTOR
F/C	FUSE CUT-OUT
⊠	FAN SHUTDOWN
R	RELAY
D	DAMPER
DR	DOOR RELEASE
F	MANUAL STATION
WS	WARDEN STATION
⌇	END OF LINE RESISTOR
▶□	STAIR SPEAKER
WF	WATERFLOW SWITCH
TS	TAMPER SWITCH
J	JUNCTION BOX
CD	COMBINATION SMOKE & HEAT DETECTOR
SS	SUB-SYSTEM

3	05/05/00	JM	ADDED (1) RELAY FOR DOOR RELEASE ON 38TH FL. PER LJ-80208.
2	7/2/99	CS	ADDED (2) STROBES ON 38TH FL. FOR 'SOLOMON SMITH BARNEY' PER FJ-65204.
1	7/2/99	CS	RISER REDRAWN. SEE DWG# E-504111-4 SH. 4 FOR REFERENCING PAST REVISIONS.

REV	DATE	BY	DESCRIPTION

OFFICE BUILDING
7 WORLD TRADE CENTER
N.Y.C.

CONTRACTOR | ENGINEER

PARTIAL RISER DIAGRAM
38TH FLOOR

FIRECOM, INC.
CASE/ACME
39-27 STREET
WOODSIDE, NEW YORK 11377

DRWN	L.H.
APPVD	
ENGR	C.S.
CKD	
DATE	7/2/99
SCALE	N.T.S.
SHEET	2
OF	2
JOB#	FJ-26840
DWG#	B-504111-38
REV	3

38TH FLOOR

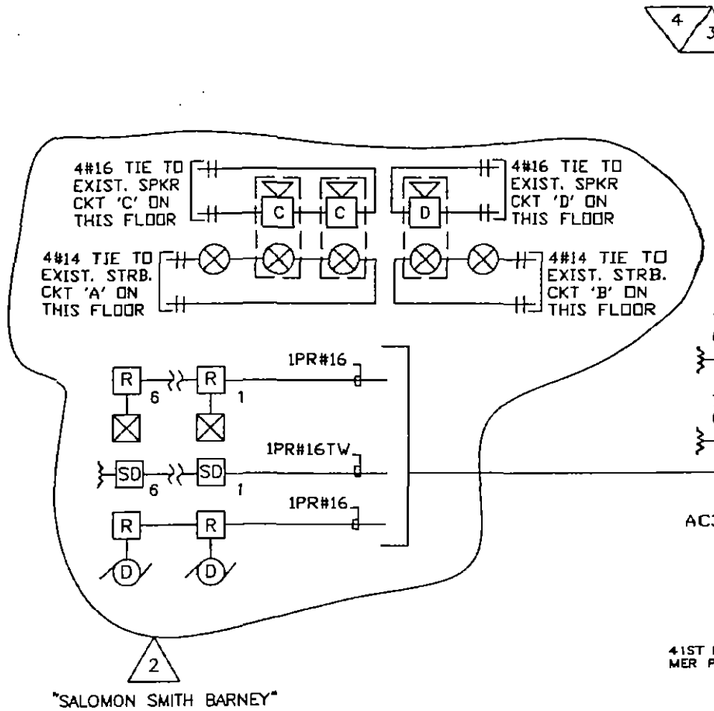

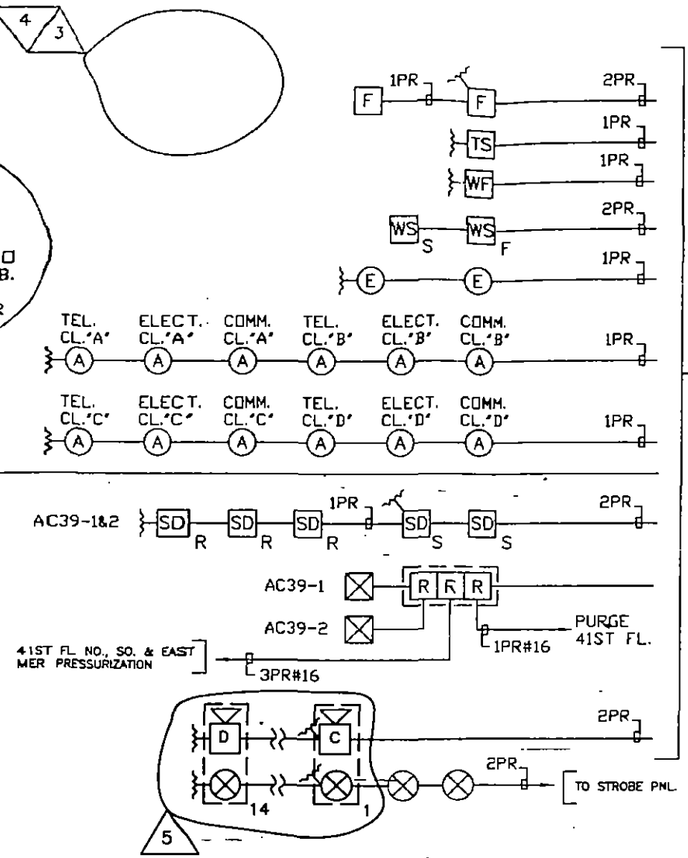

TTB#16B
D-504302
ON THIS FL.

TTB#16A
D-504320
ON THIS FL.

NEW LOCATION

"SALOMON SMITH BARNEY"

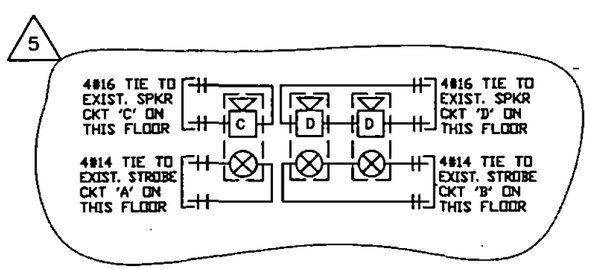

LEGEND

SYMBOL	DESCRIPTION
TTB	TRANSMISSION TERMINAL BOX
	STROBE LIGHT
	COMB. SPKR/STROBE
	SPEAKER F = FLUSH
A	AREA SMOKE DETECTOR
E	ELEVATOR LOBBY DETECTOR
H	HEAT DETECTOR
SD	DUCT SMOKE DETECTOR S = SUPPLY R = RETURN
F/C	FUSE CUT-OUT
	FAN SHUTDOWN
R	RELAY
D	DAMPER
DR	DOOR RELEASE
F	MANUAL STATION
WS	WARDEN STATION S = SURFACE F = FLUSH
	END OF LINE RESISTOR
	STAIR SPEAKER
WF	WATERFLOW SWITCH
TS	TAMPER SWITCH

5	11/14/00	JM	ADDED (3) SPKR./STRBS. & REPLACED (14) EXIST. SPKR./STRBS. FOR 'SALOMON SMITH BARNEY' PER LJ-80504.
4	9/23/99	C.S.	DELETED (2) AREA SMK. DETS., (1) DUCT SMK. DETS., (1) RELAY FOR FAN SHUTDOWN, (1) PRE-ACTION PNL. & (1) STRB. FROM TTB #16 D-504320 & TRANSFERRED TO TTB #26B D-504948-14. DELETED (1) MANUAL STATION FROM TTB#16 D-504320 & TRANSFERRED TO TTB #26A 504948-13 PER FJ-65149.
3	6/25/99	C.S.	ADDED (1) STROBE, (2) AREA SMK. DETS., (1) DUCT SMK. DET., (1) RELAY FOR FAN SHUTDOWN, (1) MANUAL PULL STATION & (1) PRE-ACTION PNL. ON 39TH FL. FOR 'SOLOMON SMITH BARNEY' PER FJ-65149.
2	6/16/99	C.S.	ADDED (3) SPEAKER/STROBES, (2) STROBES, (6) DUCT SMK. DETS., (6) RELAYS FOR FAN SHUTDOWN & (2) RELAYS FOR DAMPER CONTROL ON 39TH FL. FOR 'SOLOMON SMITH BARNEY' PER FJ-65162.
1	6/16/99	C.S.	RISER REDRAWN. SEE DWG# E-504111-4 SH. 4 FOR REFERENCING PAST REVISIONS.

REV	DATE	BY	DESCRIPTION

OFFICE BUILDING
7 WORLD TRADE CENTER
N.Y.C.

CONTRACTOR | ENGINEER

PARTIAL RISER DIAGRAM
39TH FLOOR

FIRECOM, INC.
CASE/ACME
39-27 STREET
WOODSIDE, NEW YORK 11377

DRWN	L.H.
APPVD	
ENGR	C.S.
CKD	
DATE	6/16/99
SCALE	N.T.S.
SHEET	1
JOB#	FJ-26840
OF	2
DWG#	B-504111-39
REV	5

39TH FLOOR

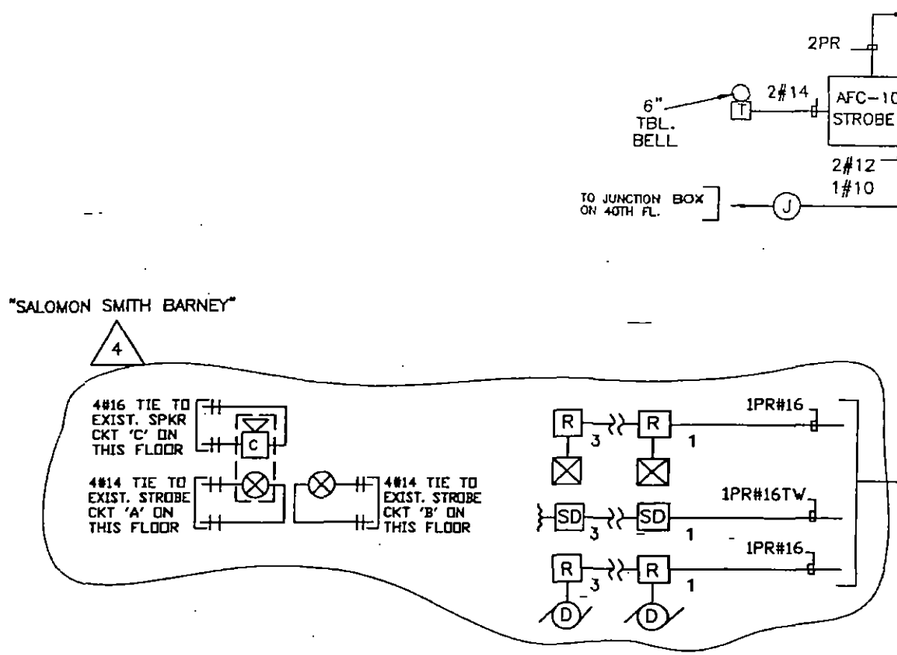

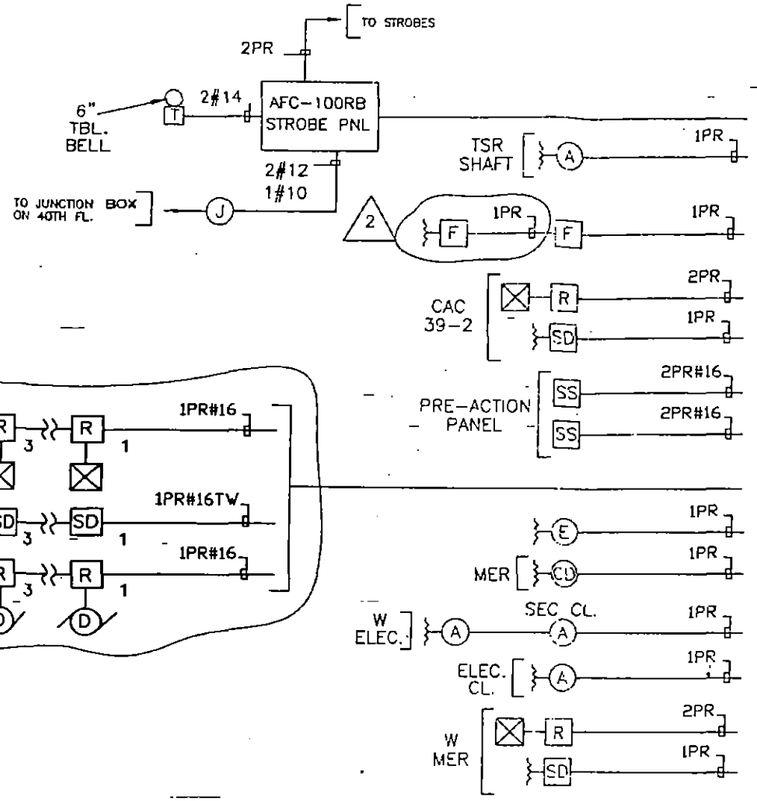

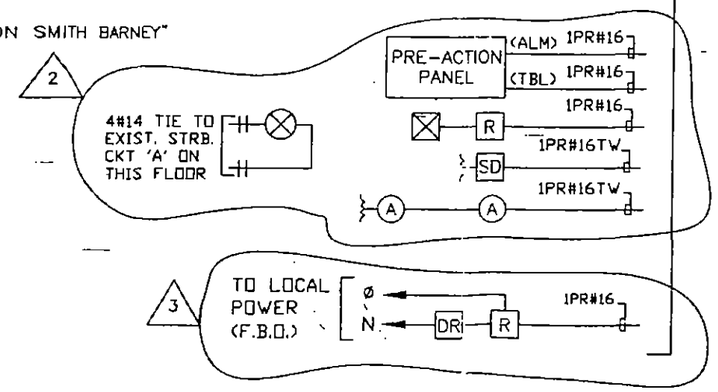

TTB#26B
D-504948-14
ON 38TH FL.

TTB#26A
D-504948-13
ON 38TH FL.

LEGEND

SYMBOL	DESCRIPTION
TTB	TRANSMISSION TERMINAL BOX
⊗	STROBE LIGHT
▷□ ⊗	COMB. SPKR/STROBE
▷□	SPEAKER F = FLUSH
(A)	AREA SMOKE DETECTOR
(E)	ELEVATOR LOBBY DETECTOR
(H)	HEAT DETECTOR
SD	DUCT SMOKE DETECTOR S = SUPPLY R = RETURN
F/C	FUSE CUT-OUT
⊠	FAN SHUTDOWN
R	RELAY
(D)	DAMPER
DR	DOOR RELEASE
F	MANUAL STATION
WS	WARDEN STATION S = SURFACE F = FLUSH
	END OF LINE RESISTOR
▶□	STAIR SPEAKER
WF	WATERFLOW SWITCH
TS	TAMPER SWITCH
(J)	JUNCTION BOX
SS	SUB-SYSTEM
(CD)	COMBINATION SMOKE & HEAT DETECTOR

REV	DATE	BY	DESCRIPTION
4	11/22/00	JM	ADDED (1) SPKR./STRB., (1) STRB., (3) DUCT SMK. DETS., (3) RELAYS FOR FAN SHUTDOWN & (3) RELAYS FOR DAMPER CONTROL FOR "SALOMON SMITH BARNEY" PER LJ-80504-01.
3	05/05/00	JM	ADDED (1) RELAY FOR DOOR RELEASE ON 39TH FL. PER LJ-80208.
2	9/23/99	CS	TRANSFERRED (2) AREA SMK. DETS., (1) DUCT SMK. DETS., (1) RELAY FOR FAN SHUTDOWN, (1) PRE-ACTION PNL. & (1) STRB. FROM TTB#16 D-504320 TO TTB #26B D-504948-14. TRANSFERRED (1) MANUAL STATION FROM TTB#16 D-504320 TO TTB #26A D-504948-13 PER FJ-65149.
1	6/16/99	CS	RISER REDRAWN. SEE DWG# E-504111-4 SH. 4 FOR REFERENCING PAST REVISIONS.

OFFICE BUILDING
7 WORLD TRADE CENTER
N.Y.C.

DRN: L.H.
APPVD:
ENGR: C.S.
CKD:
CONTRACTOR: ENGINEER:
DATE: 6/16/99
SCALE: N.T.S.
SHEET: 2
OF: 2
REV: 4

PARTIAL RISER DIAGRAM
39TH FLOOR

FIRECOM, INC.
CASE/ACME
38-37 STREET
WOODSIDE, NEW YORK 11377

JOB# FJ-26840
DWG# B-504111-39

39TH FLOOR

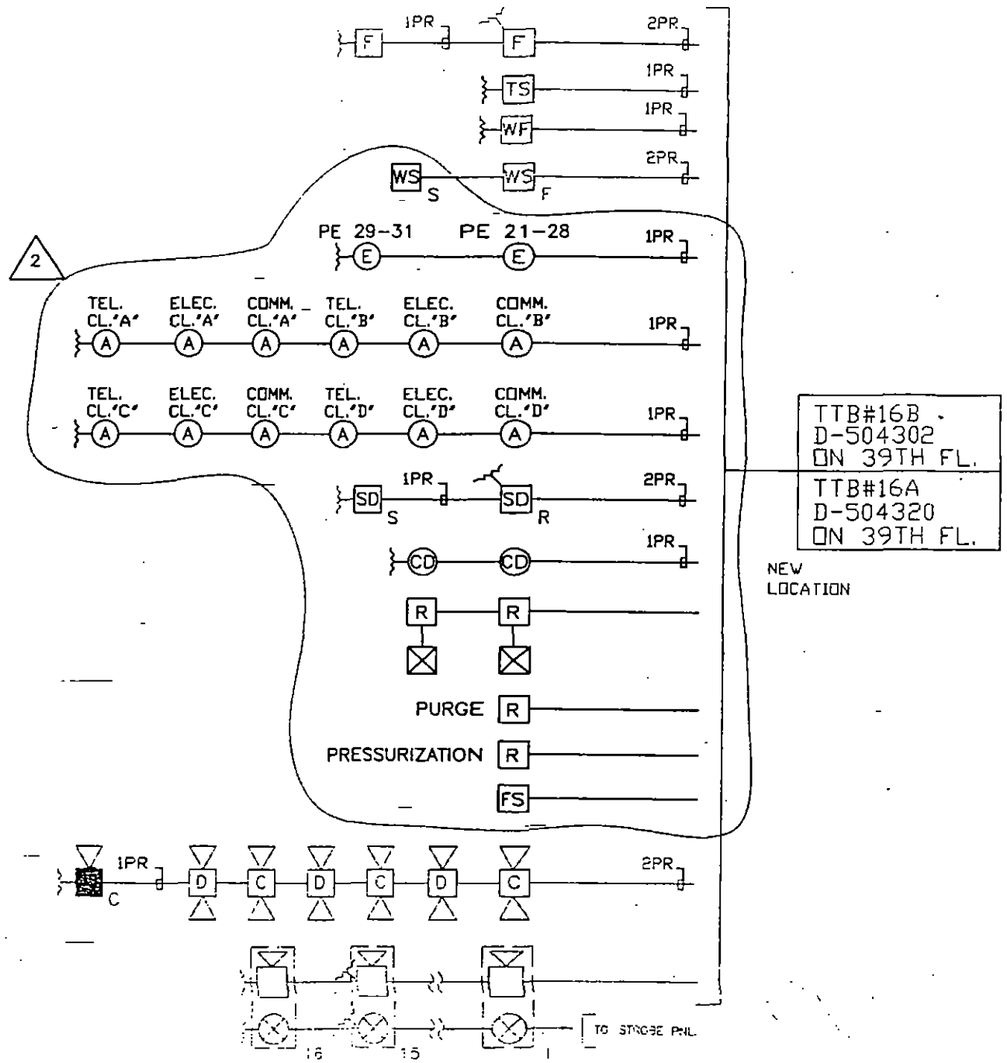

40TH FLOOR

LEGEND	
SYMBOL	DESCRIPTION
TTB	TRANSMISSION TERMINAL BOX
⊗	STROBE LIGHT
▷□⊗	COMB. SPKR/STROBE
▷□	SPEAKER
A	AREA SMOKE DETECTOR
E	ELEVATOR LOBBY DETECTOR
H	HEAT DETECTOR
SD	DUCT SMOKE DETECTOR R = RETURN
F/C	FUSE CUT-OUT
⊠	FAN SHUTDOWN
R	RELAY
D	DAMPER
DR	DOOR RELEASE
F	MANUAL STATION
WS	WARDEN STATION S = SURFACE F = FLUSH
≈	END OF LINE RESISTOR
▶□	STAIR SPEAKER
WF	WATERFLOW SWITCH
TS	TAMPER SWITCH
▷□◁	BI-DIRECTIONAL FLOOR SPEAKERS
FS	FAN STATUS

REV	DATE	BY	DESCRIPTION
2	3/13/00	JM	MODIFIED AS PER FJ-65296.
1	7/2/99	JM	RISER REDRAWN. SEE DWG# B-504111-4 SH. 4 FOR REFERENCING PAST REVISIONS.

OFFICE BUILDING
7 WORLD TRADE CENTER
N.Y.C.

CONTRACTOR | ENGINEER

PARTIAL RISER DIAGRAM
40TH FLOOR
"SILVERSTEIN"

FIRECOM, INC.
CASE/ACME
38-27 STREET
WOODSIDE, NEW YORK 11377

DRWN	L.H.
APP'VD	
ENGR	C.S.
CKD	
DATE	7/2/99
SCALE	N.T.S.
SHEET	1
JOB#	FJ-26840
OF	2
DWG#	B-504111-40
REV	2

"SALOMON SMITH BARNEY"

9/3

4#16 TIE TO EXIST. SPKR CKT 'C' ON THIS FLOOR

4#16 TIE TO EXIST. SPKR CKT 'D' ON THIS FLOOR

C C D D

CKT 'A'

CKT 'B'

1PR#14

1PR#14

6" TBL. BELL

T

PAD-2 STROBE PNL D-STD-1

2PR#16

2#14

TO 120 VAC PWR(F.B.O.)

2#12

F/C

1#10 GND

1PR#16TW

A A

17 1

9

1PR

E

MER

1PR

CD

W. ELEC.

SEC CL.

A A

1PR

8

ELEC. CL.

A

1PR

W. MER

SD

1PR

F

1PR

6

WEST OSR

PRE-ACTION PANEL

(TBL.)

1PR#16

(ALM.)

1PR#16

EAST OSR

PRE-ACTION PANEL

(TBL.)

1PR#16

(ALM.)

1PR#16

10

"SALOMON SMITH BARNEY"

4#14 TIE TO EXIST. STRB. CKT 'A' ON THIS FL.

4#14 TIE TO EXIST. STRB. CKT 'B' ON THIS FL.

2

"SALOMON SMITH BARNEY"

4#16 TIE TO EXIST. SPKR CKT 'C' ON THIS FLOOR

4#16 TIE TO EXIST. SPKR CKT 'D' ON THIS FLOOR

C C D

4#14 TIE TO EXIST. STRB. CKT 'A' ON THIS FLOOR

4#14 TIE TO EXIST. STRB. CKT 'B' ON THIS FLOOR

7

"SALOMON SMITH BARNEY"

11

1PR#16

R DR

ø N

TO LOCAL POWER (F.B.O.)

TTB#27B D-504948-16 ON THIS FL.

TTB#27A D-504948-15 ON THIS FL.

1PR#16TW

A

1PR#16

R DR

ø N

TO LOCAL POWER (F.B.O.)

4#16 TIE TO EXIST. SPKR CKT 'C' ON THIS FLOOR

4#16 TIE TO EXIST. SPKR CKT 'D' ON THIS FLOOR

C C D D

4#14 TIE TO EXIST. STRB. CKT 'A' ON THIS FLOOR

4#14 TIE TO EXIST. STRB. CKT 'B' ON THIS FLOOR

9 1 1 9

4/9

"SALOMON SMITH BARNEY"

LEGEND

SYMBOL	DESCRIPTION
TTB	TRANSMISSION TERMINAL BOX
⊗	STROBE LIGHT
▷□ ⊗	COMB. SPKR/STROBE
▷□	SPEAKER
A	AREA SMOKE DETECTOR
E	ELEVATOR LOBBY DETECTOR
H	HEAT DETECTOR
SD	DUCT SMOKE DETECTOR
F/C	FUSE CUT-OUT
⊠	FAN SHUTDOWN
R	RELAY
D	DAMPER
DR	DOOR RELEASE
F	MANUAL STATION
WS	WARDEN STATION
	END OF LINE RESISTOR
▶□	STAIR SPEAKER
WF	WATERFLOW SWITCH
TS	TAMPER SWITCH
J	JUNCTION BOX
CD	COMBINATION SMOKE & HEAT DETECTOR

REV	DATE	BY	DESCRIPTION
11	05/05/00	JM	ADDED (1) RELAY FOR DOOR RELEASE PER L.J-80208.
10	04/24/00	JM	ADDED (2) PRE-ACTION PNLS. FOR "SALOMON SMITH BARNEY" PER L.J-80202.
9	03/13/00	JM	MODIFIED AS PER F.J-65296.
8	03/09/00	JM	ADDED (1) FIRE ALARM CONTROL PNL. WITH UNDER FLOOR DETS. & GRAPHIC CARD PNL. FOR UNDER FLOOR DET. PER L.J-80021.
7	02/02/00	JM	ADDED (3) SPKR./STRB. ON 40TH FL. FOR "SALOMON SMITH BARNEY" PER L.J-80045-01.
6	01/31/00	JM	DELETED SUB-SYSTEM, FAN STATUS & FAN SHUTDOWN FROM 40TH FL. PER L.J-80061.
5	01/07/00	JM	ADDED (1) DUCT SMK. DET. & (1) RELAY FOR FAN SHUTDOWN ON 40TH FL. FOR "SALOMON SMITH BARNEY" PER L.J-80049.
4	01/06/00	CS	ADDED (18) SPKR./STRBS., (1) AREA SMK. DET., (5) RELAYS FOR DAMPER CONTROL & (1) RE-LAY FOR DOOR RELEASE ON 40TH FL. FOR "SALO-MON SMITH BARNEY" PER L.J-80045.
3	9/18/99	CS	ADDED (1) PAD-2 STRB. PNL., (4) SPKR./STRBS., (2) DUCT SMK. DETS., (2) RELAYS FOR FAN SHUTDOWN, (17) AREA SMK. DETS. & (1) WARDEN STATION ON 40TH FL. FOR "SALOMON SMITH BARNEY" PER F.J-65296.
2	7/2/99	CS	ADDED (7) STRBS. ON 40TH FL. FOR "SALOMON SMITH BARNEY" PER F.J-65274.
1	7/2/99	CS	RISER REDRAWN, SEE DWG# F-504111-4 SH. 4 FOR REFERENCING PAST REVISIONS.

OFFICE BUILDING
7 WORLD TRADE CENTER
N.Y.C.

DRN L.H.
APPVD
ENGR C.S.
CKD
DATE 7/2/99
SCALE N.T.S.
SHEET 2
OF 2
REV 11

CONTRACTOR
ENGINEER

PARTIAL RISER DIAGRAM
40TH FLOOR
"SALOMON SMITH BARNEY"

FIRECOM, INC.
CASE/AUME
39-27 STREET
WOODSIDE, NEW YORK 11377

JOB# FJ-26840
DWG# B-504111-40

40TH FLOOR

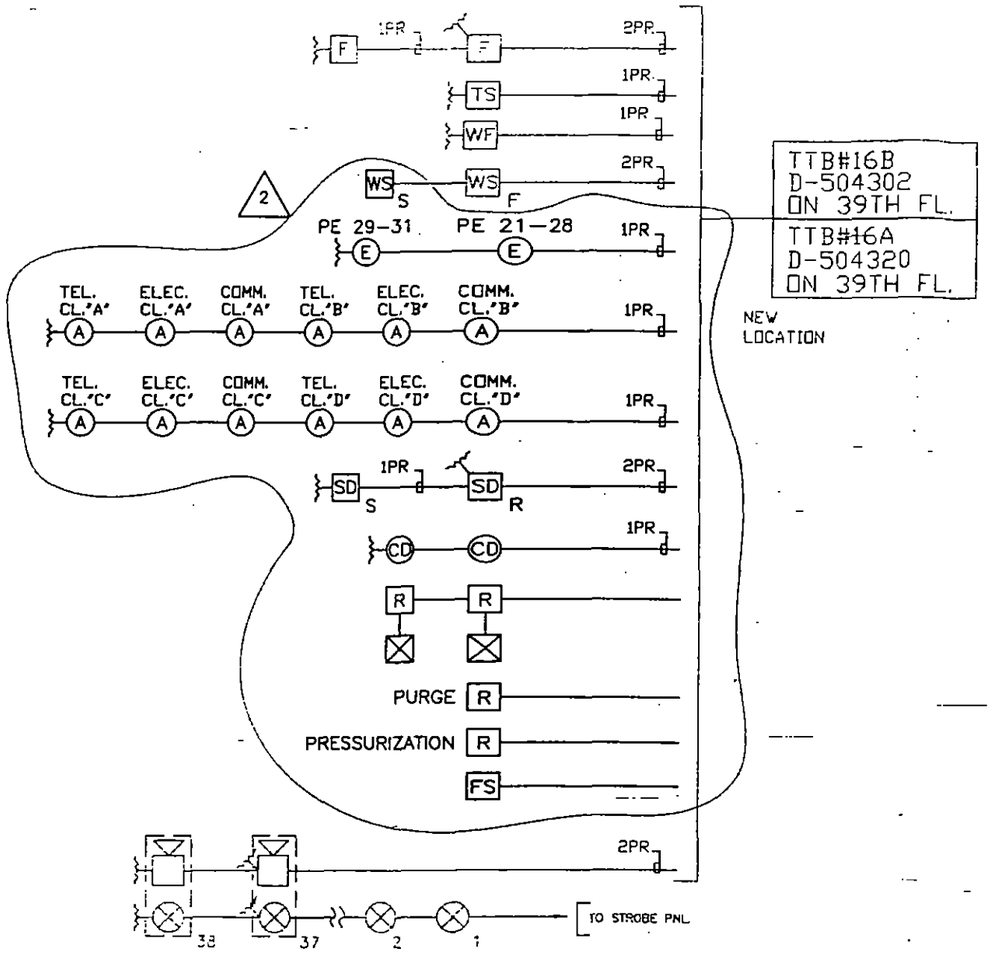

TTB#16B
D-504302
ON 39TH FL.

TTB#16A
D-504320
ON 39TH FL.

NEW LOCATION

41ST FLOOR

LEGEND

SYMBOL	DESCRIPTION
TTB	TRANSMISSION TERMINAL BOX
⊗	STROBE LIGHT
▷□⊗	COMB. SPKR/STROBE
▷□	SPEAKER
A	AREA SMOKE DETECTOR
E	ELEVATOR LOBBY DETECTOR
H	HEAT DETECTOR
SD	DUCT SMOKE DETECTOR R = RETURN
F/C	FUSE CUT-OUT
⊠	FAN SHUTDOWN
R	RELAY
D	DAMPER
DR	DOOR RELEASE
F	MANUAL STATION
WS	WARDEN STATION S = SURFACE F = FLUSH
⏚	END OF LINE RESISTOR
▶□	STAIR SPEAKER
WF	WATERFLOW SWITCH
TS	TAMPER SWITCH
FS	FAN STATUS

REV	DATE	BY	DESCRIPTION
2	3/13/00	JH	MODIFIED AS PER FJ-65296.
1	7/6/99	CS	REVISED DRAWN. SEE DWG# B-504111-2 SH. 5 FOR REFERENCING PAST REVISIONS

OFFICE BUILDING
7 WORLD TRADE CENTER
N.Y.C.

CONTRACTOR | ENGINEER

PARTIAL RISER DIAGRAM
41ST FLOOR
'SILVERSTEIN'

FIRECOM, INC.
CASE/ACME
38-27 STREET
WOODSIDE, NEW YORK 11377

DRN	L.H.
APPVD	
ENGR	C.S.
CKD	
DATE	7/6/99
SCALE	N.T.S.
SHEET	1
JOB #	FJ-26840
OF	2
DWG #	B-504111-41
REV	2

"SALOMON SMITH BARNEY"

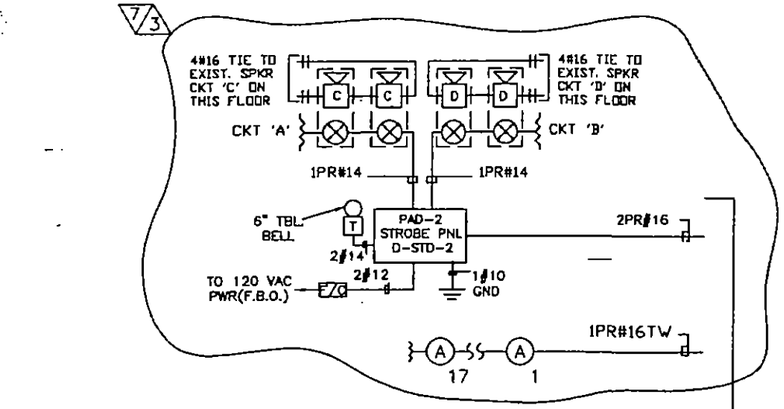

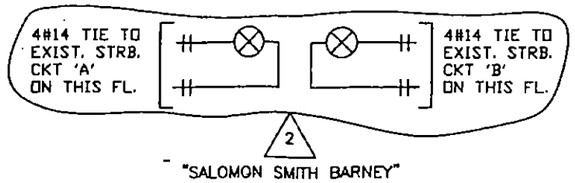

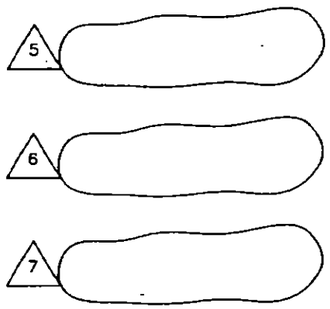

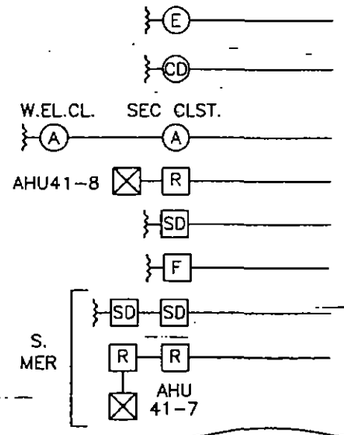

TTB#28B
D-504948-18
ON 42ND FL.
TTB#28A
D-504948-17
ON 42ND FL.

"SALOMON SMITH BARNEY"

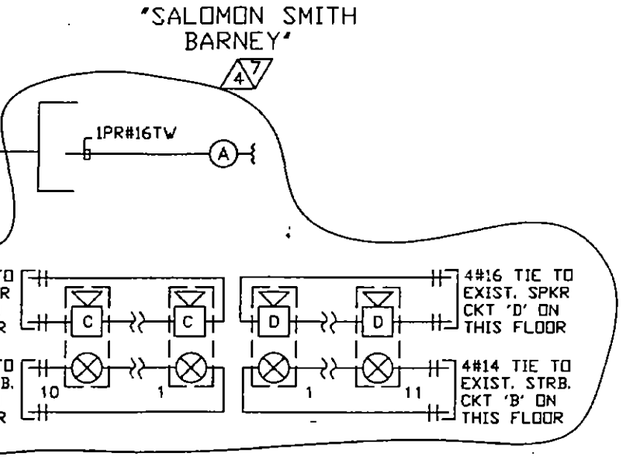

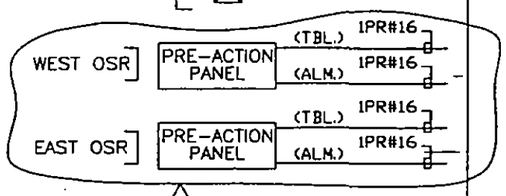

"SALOMON SMITH BARNEY"

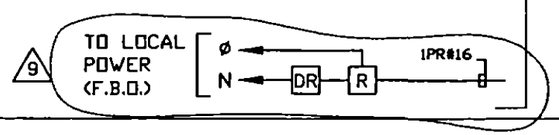

41ST FLOOR

LEGEND

SYMBOL	DESCRIPTION
TTB	TRANSMISSION TERMINAL BOX
⊗	STROBE LIGHT
▷□⊗	COMB. SPKR/STROBE
▷□	SPEAKER
(A) --	AREA SMOKE DETECTOR
(E)	ELEVATOR LOBBY DETECTOR
(H)	HEAT DETECTOR
SD	DUCT SMOKE DETECTOR
F/C	FUSE CUT-OUT
⊠	FAN SHUTDOWN
R	RELAY
(D)	DAMPER
DR	DOOR RELEASE
F	MANUAL STATION
WS	WARDEN STATION
≷	END OF LINE RESISTOR
▶□	STAIR SPEAKER
WF	WATERFLOW SWITCH
TS	TAMPER SWITCH
CD	COMBINATION SMOKE & HEAT DETECTOR

REV	DATE	BY	DESCRIPTION
9	05/05/00	J.M.	ADDED (1) RELAY FOR DOOR RELEASE ON 41ST FL. PER LJ-80208.
8	04/24/00	J.M.	ADDED (2) PRE-ACTION PANELS FOR "SALOMON BARNEY" PER LJ-80202.
7	03/13/00	J.M.	MODIFIED AS PER FJ-65296.
6	03/09/00	J.M.	DELETED PRE-ACTION PNL. & ANSUE SYSTEM ON 41ST FL. PER LJ-80061.
5	01/31/00	J.M.	DELETED SUB-SYSTEM, DUCT DETS., FAN SHUT-DOWN & COMBINATION SMK. & HEAT DETS. FROM 41ST FL. PER LJ-80061.
4	01/06/00	J.M.	ADDED (21) SPKR./STRBS., (1) AREA SMK. DETS. & (5) RELAYS FOR DAMPER CONTROL ON 41ST FL. FOR "SALOMON SMITH BARNEY" PER LJ-80046
3	9/18/99	C.S.	ADDED (1) PAD-2 STRB. PNL., (4) SPKR./STRBS., (2) DUCT SMK. DETS., (2) RELAYS FOR FAN SHUTDOWN, (17) AREA SMK. DETS. & (1) WARDEN STATION ON 41ST FL. FOR "SALOMON SMITH BARNEY" PER FJ-65296.
2	7/6/99	C.S.	ADDED (2) STROBES ON 41ST FL. FOR "SALOMON SMITH BARNEY" PER FJ-65204.
1	7/6/99	C.S.	RISER REDRAWN. SEE DWG# E-504111-5 SH. 5 FOR REFERENCING PAST REVISIONS.

OFFICE BUILDING
7 WORLD TRADE CENTER
N.Y.C.

CONTRACTOR | ENGINEER

PARTIAL RISER DIAGRAM
41ST FLOOR
"SALOMON SMITH BARNEY"

FIRECOM, INC.
CASE/ACME
30-17 STREET
WOODSIDE, NEW YORK 11377

DSN	L.H.
APPVD	
DWN	C.S.
CKD	
DATE	7/6/99
SCALE	N.T.S.
SHEET	2
JOB#	FJ-26840
OF	2
DWG#	B-504111-41
REV	9

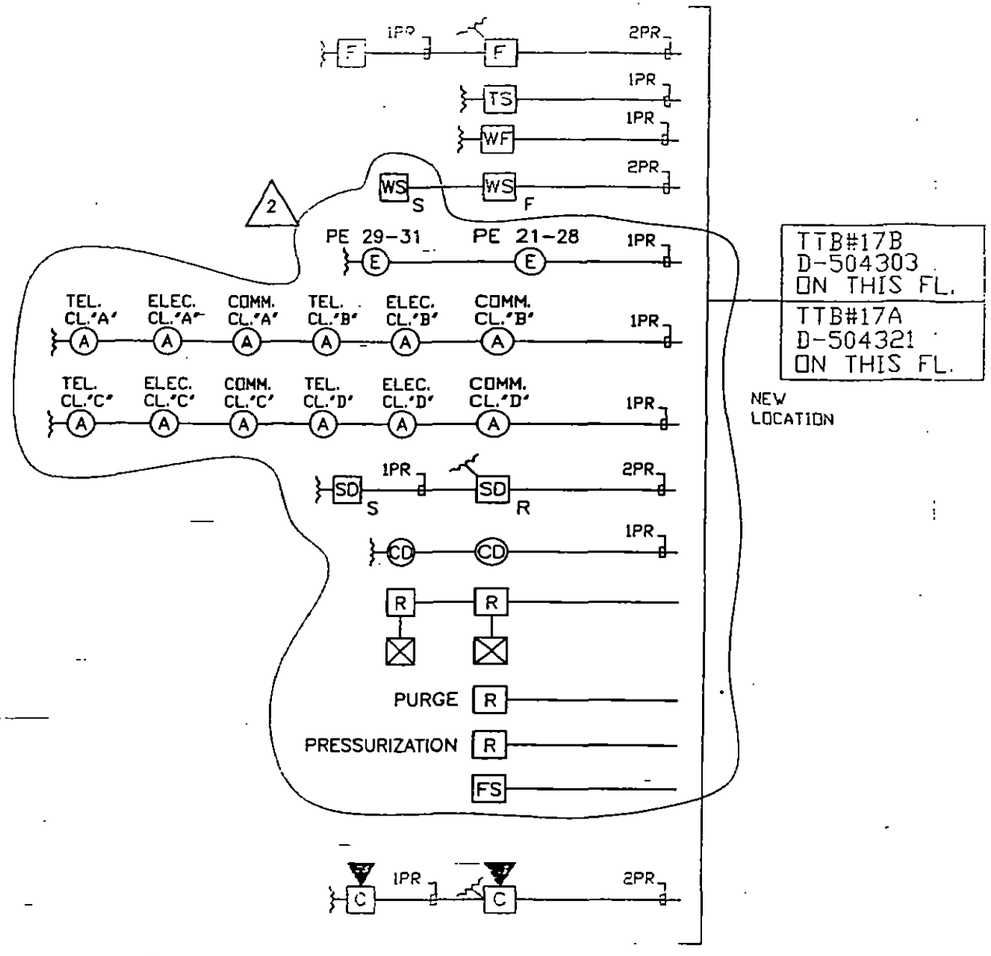

LEGEND	
SYMBOL	DESCRIPTION
TTB	TRANSMISSION TERMINAL BOX
⊗	STROBE LIGHT
▷□⊗	COMB. SPKR/STROBE
▷□	SPEAKER
A	AREA SMOKE DETECTOR
E	ELEVATOR LOBBY DETECTOR
H	HEAT DETECTOR
SD	DUCT SMOKE DETECTOR R = RETURN
F/C	FUSE CUT-OUT
⊠	FAN SHUTDOWN
R	RELAY
D	DAMPER
DR	DOOR RELEASE
F	MANUAL STATION
WS	WARDEN STATION S = SURFACE F = FLUSH
≈	END OF LINE RESISTOR
▶□	STAIR SPEAKER
WF	WATERFLOW SWITCH
TS	TAMPER SWITCH
FS	FAN STATUS

REV	DATE	BY	DESCRIPTION
2	3/13/00	JM	MODIFIED AS PER FJ-65296.
1	7/6/99	CS	RISER REDRAWN. SEE DWG# E-504111-5 SH. 5 FOR REFERENCING PAST REVISIONS.

OFFICE BUILDING
7 WORLD TRADE CENTER
N.Y.C.

CONTRACTOR | ENGINEER

PARTIAL RISER DIAGRAM
42ND FLOOR
'SILVERSTEIN'

FIRECOM, INC.
CASE/ACME
38-27 STREET
WOODSIDE, NEW YORK 11377

DRN	L.H.
APPVD	
ENGR	C.S.
CKD	
DATE	7/6/99
SCALE	N.T.S.
SHEET	1
JOB#	FJ-26840
OF	2
DWG#	B-504111-42
REV	2

42ND FLOOR

4#14 TIE TO EXIST. STRB. CKT 'A' ON THIS FL.

4#14 TIE TO EXIST. STRB. CKT 'B' ON THIS FL.

2 "SALOMON SMITH BARNEY"

4#16 TIE TO EXIST. SPKR CKT 'C' ON THIS FLOOR

4#16 TIE TO EXIST. SPKR CKT 'D' ON THIS FLOOR

CKT 'A'

CKT 'B'

1PR#14

1PR#14

6" TBL BELL

PAD-2 STROBE PNL D-STD-3

2PR#16

2#14

2#12

TO 120 VAC PWR(F.B.O.)

F/C

1#10 GND

8/3

1PR#16TW

17

1

"SALOMON SMITH BARNEY"

"SALOMON SMITH BARNEY"

1PR

W. MER

1PR

9

WEST OSR

PRE-ACTION PANEL

(TBL.) 1PR#16

(ALM.) 1PR#16

EAST OSR

PRE-ACTION PANEL

(TBL.) 1PR#16

(ALM.) 1PR#16

W. ELEC. CL.

SEC CLST.

6

10

TO LOCAL POWER (F.B.O.)

ø

N

DR

R

1PR#16

W. MER

1PR

1PR

1PR

8

TO LOCAL POWER (F.B.O.)

ø

N

DR

R

1PR#16

1PR#16TW

"SALOMON SMITH BARNEY" 8/5

"SALOMON SMITH BARNEY" 8/7

1PR#16

1PR#16

1PR#16

1PR#16

"SALOMON SMITH BARNEY"

4

4#16 TIE TO EXIST. SPKR CKT 'C' ON THIS FLOOR

4#16 TIE TO EXIST. SPKR CKT 'D' ON THIS FLOOR

4#14 TIE TO EXIST. STRB. CKT 'A' ON THIS FLOOR

4#14 TIE TO EXIST. STRB. CKT 'B' ON THIS FLOOR

9/7

1

1

9/7

42ND FLOOR

TTB#28B D-504948-18 ON THIS FL.

TTB#28A D-504948-17 ON THIS FL.

M/C

EXT. TTB B-508084 ON THIS FL.

LEGEND

SYMBOL	DESCRIPTION
TTB	TRANSMISSION TERMINAL BOX
⊗	STROBE LIGHT
▷□⊗	COMB. SPKR/STROBE
▷□	SPEAKER
A	AREA SMOKE DETECTOR
E	ELEVATOR LOBBY DETECTOR
H	HEAT DETECTOR
SD	DUCT SMOKE DETECTOR
F/C	FUSE CUT-OUT
⊠	FAN SHUTDOWN
R	RELAY
D	DAMPER
DR	DOOR RELEASE
F	MANUAL STATION
WS	WARDEN STATION
⊣	END OF LINE RESISTOR
▶□	STAIR SPEAKER
WF	WATERFLOW SWITCH
TS	TAMPER SWITCH
J	JUNCTION BOX
CD	COMBINATION SMOKE & HEAT DETECTOR

10	05/05/00	JM	ADDED (1) RELAY FOR DOOR RELEASE ON 42ND FL. PER LJ-80208.
9	04/24/00	JM	ADDED (2) PRE-ACTION PANELS FOR "SALOMON SMITH BARNEY" PER LJ-80202.
8	03/13/00	JM	MODIFIED AS PER FJ-65296.
7	02/02/00	JM	ADDED (2) RELAYS FOR DAMPER CONTROL, DELETED (2) AREA SMK. DETS. & (3) SPKR./STROBES FROM 42ND FL. FOR "SALOMON SMITH BARNEY" PER LJ-80048-01.
6	01/31/00	JM	DELETED SUB-SYSTEM, FAN STOP STATUS & FAN SHUTDOWN FROM 42ND FL. PER LJ-80061.
5	01/10/00	JM	ADDED (1) DUCT SMK. DET. & (1) RELAY FOR FAN SUTDOWN ON 42ND FL. FOR "SALOMON SMITH BARNEY" PER LJ-80049.
4	01/07/00	JM	ADDED (21) SPKR./STRBS., (3) AREA SMK. DETS., (4) RELAYS FOR DAMPER CONTROL, (19) DAMPERS, (1) RELAY FOR DOOR RELEASE & (1) EXT. TTB ON 42ND FL. FOR "SALOMON SMITH BARNEY" PER LJ-80048.
3	9/18/99	CS	ADDED (1) PAD-2 STRB. PNL., (4) SPKR./STRBS., (2) DUCT SMK. DETS., (2) RELAYS FOR FAN SHUTDOWN, (17) AREA SMK. DETS. & (1) WARDEN STATION ON 42ND FL. FOR "SALOMON SMITH BARNEY" PER FJ-65296.
2	7/6/99	CS	ADDED (2) STROBES ON 42ND FL. FOR "SALOMON SMITH BARNEY" PER FJ-65204.
1	7/6/99	CS	RISER REDRAWN. SEE DWG# E-504111-5 SH. 5 FOR REFERENCING PAST REVISIONS.

REV	DATE	BY	DESCRIPTION

OFFICE BUILDING
7 WORLD TRADE CENTER
N.Y.C.

CONTRACTOR | ENGINEER

PARTIAL RISER DIAGRAM
42ND FLOOR
"SALOMON SMITH BARNEY"

FIRECOM, INC. CASE/ACME
36-37 STREET
WOODSIDE, NEW YORK 11377

DRN	L.H.
APPVD	
ENGR	C.S.
CKD	
DATE	7/6/99
SCALE	N.T.S.
SHEET	2
OF	2
JOB#	FJ-26840
DWG#	B-504111-42
REV	10

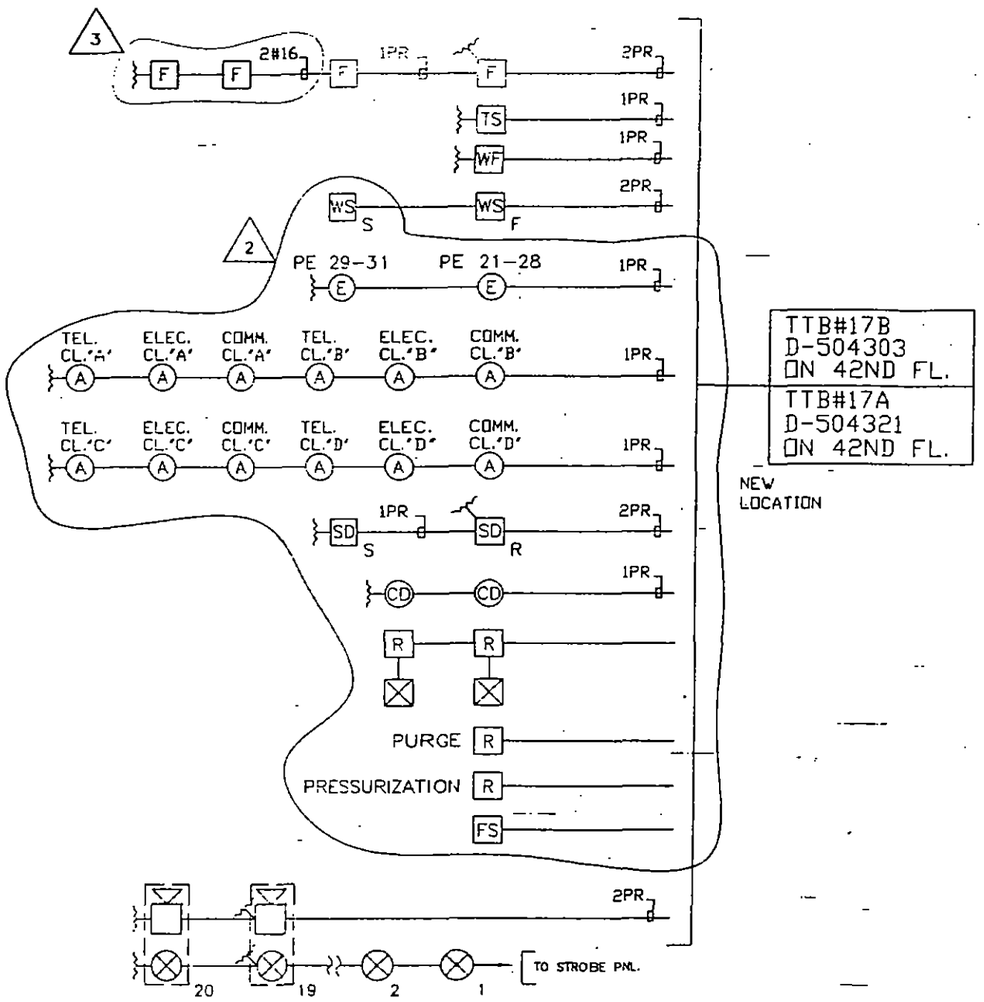

TTB#17B
D-504303
ON 42ND FL.

TTB#17A
D-504321
ON 42ND FL.

NEW LOCATION

LEGEND	
SYMBOL	DESCRIPTION
TTB	TRANSMISSION TERMINAL BOX
⊗	STROBE LIGHT
▷□⊗	COMB. SPKR/STROBE
▷□	SPEAKER
A	AREA SMOKE DETECTOR
E	ELEVATOR LOBBY DETECTOR
H	HEAT DETECTOR
SD	DUCT SMOKE DETECTOR R = RETURN
F/C	FUSE CUT-OUT
⊠	FAN SHUTDOWN
R	RELAY
D	DAMPER
DR	DOOR RELEASE
F	MANUAL STATION
WS	WARDEN STATION S = SURFACE F = FLUSH
≷	END OF LINE RESISTOR
▶□	STAIR SPEAKER
WF	WATERFLOW SWITCH
TS	TAMPER SWITCH
FS	FAN STATUS

REV	DATE	BY	DESCRIPTION
3	03/23/00	JM	ADDED (2) MANUAL PULL STATIONS PER LJ-80143
2	03/13/00	JM	REVISED AS PER FJ-65E96.
1	07/09/99	CS	RISER REDRAWN. SEE DWG# E-504111-5 SH. 5 FOR REFERENCING PAST REVISIONS.

OFFICE BUILDING
7 WORLD TRADE CENTER
N.Y.C.

CONTRACTOR | ENGINEER

PARTIAL RISER DIAGRAM
43RD FLOOR
"SILVERSTEIN"

FIRECOM, INC.
CASE/ACME
38-27 STREET
WOODSIDE, NEW YORK 11377

DRN	L.H.
APPVD	
ENGR	C.S.
CKD	
DATE	7/9/99
SCALE	N.T.S.
SHEET	1
OF	2
JOB#	FJ-26840
DWG#	B-504111-43
REV	3

43RD FLOOR

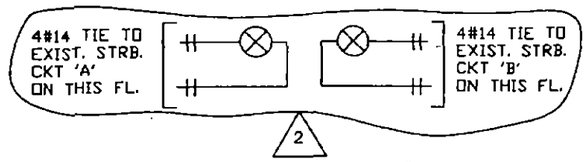

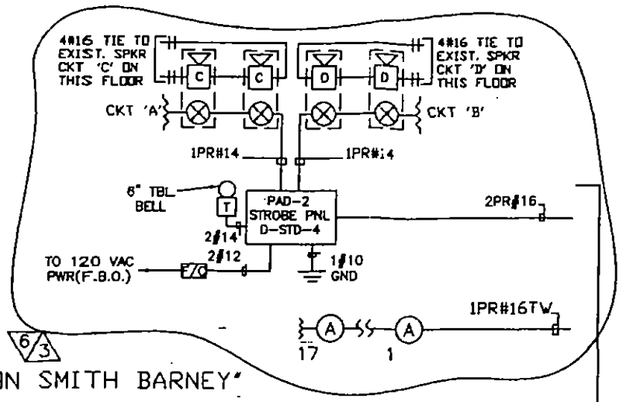

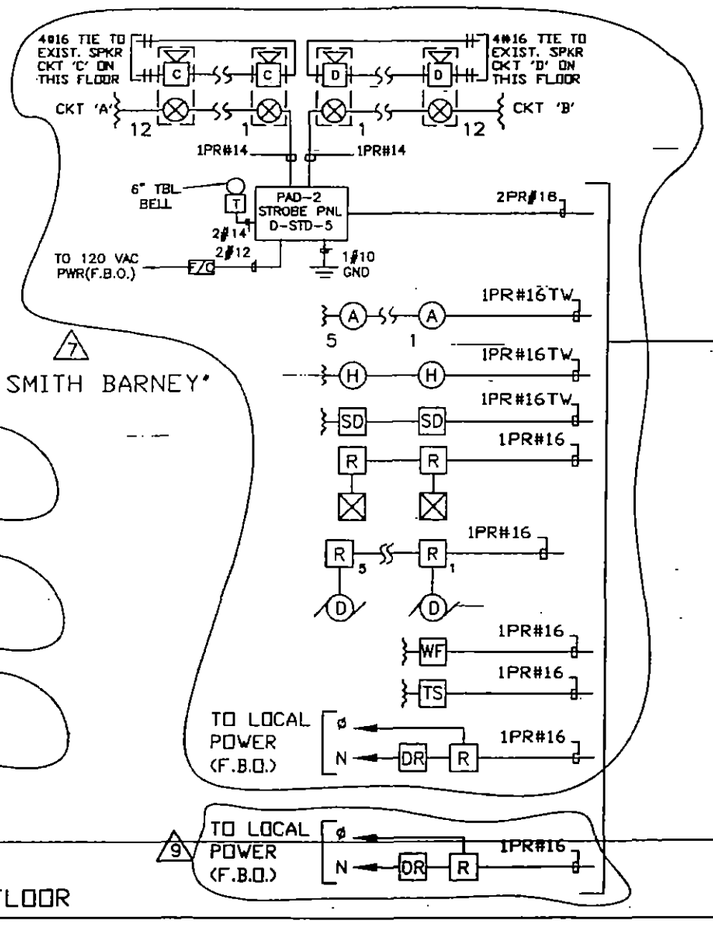

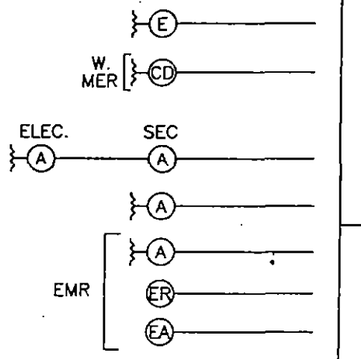

TTB#29B
D-504948-20
ON THIS FL.

TTB#29A
D-504948-19
ON THIS FL.

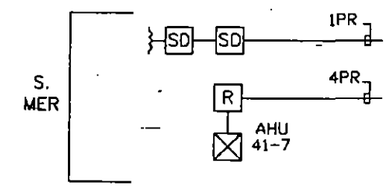

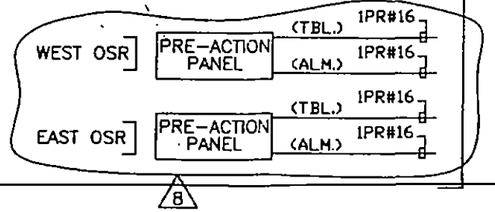

LEGEND	
SYMBOL	DESCRIPTION
TTB	TRANSMISSION TERMINAL BOX
⊗	STROBE LIGHT
▷□⊗	COMB. SPKR/STROBE
▷□	SPEAKER
A	AREA SMOKE DETECTOR
E	ELEVATOR LOBBY DETECTOR
H	HEAT DETECTOR
SD	DUCT SMOKE DETECTOR
F/C	FUSE CUT-OUT
⊠	FAN SHUTDOWN
R	RELAY
D	DAMPER
DR	DOOR RELEASE
F	MANUAL STATION
WS	WARDEN STATION
⊣	END OF LINE RESISTOR ;
WF	WATERFLOW SWITCH
TS	TAMPER SWITCH
CD	COMBINATION SMOKE & HEAT DETECTOR
ER	ELEVATOR RECALL JUNCTION BOX
EA	ELEVATOR ADVANCE

9	05/05/00	J.M.	ADDED (1) RELAY FOR DOOR RELEASE ON 43RD FL. PER LJ-80208.
8	04/24/00	J.M.	ADDED (2) PRE-ACTION PANELS FOR "SALOMON SMITH BARNEY" PER LJ-80202.
7	03/22/00	J.M.	ADDED (1) PAD-2 STRB. PNL., (24) SPKR./STRBS., (2) DUCT SMK. DETS., (2) RELAYS FOR FAN SHUTDOWN, (5) AREA SMK. DETS. & (1) TAMPER SWITH, (1) WATERFLOW SWITCH, (1) RELAY FOR DOOR RELEASE & (5) RELAYS FOR DAMPER-CONTROL FOR SALOMON SMITH BARNEY" PER LJ-80143.
6	03/13/00	J.M.	MODIFIED AS PER FJ-65296.
5	03/09/00	C.S.	DELETED PRE-ACTION PNL. (SUB-SYSTEM) FROM THE 43RD FL. PER LLLJ-80061.
4	01/31/00	C.S.	DELETED FAN SHUTDOWN, DUCT SMK. DETS., SUB-SYSTEM & COMBINATION SMK. & HEAT DETS. FROM 43RD FL. PER LJ-80061.
3	9/18/99	C.S.	ADDED (1) PAD-2 STRB. PNL., (4) SPKR./STRBS., (2) DUCT SMK. DETS., (2) RELAYS FOR FAN SHUTDOWN, (17) AREA SMK. DETS. & (1) WARDEN STATION ON 43RD FL. FOR "SALOMON SMITH BARNEY" PER FJ-65296.
2	7/9/99	C.S.	ADDED (2) STROBES ON 43RD FL. FOR "SALOMON SMITH BARNEY" PER FJ-65204.
1	7/9/99	C.S.	RISER REDRAWN. SEE DWG# E-504111-5 SH. 5 FOR REFERENCING PAST REVISIONS.

REV	DATE	BY	DESCRIPTION

OFFICE BUILDING
7 WORLD TRADE CENTER
N.Y.C.

CONTRACTOR | ENGINEER

PARTIAL RISER DIAGRAM
~~43RD FLOOR~~
"SALOMON SMITH BARNEY"

DRN	L.H.
APPVD	
ENGR	C.S.
CHD	
DATE	7/9/99
SCALE	N.T.S.
SHEET	2
OF	2
REV	9

FIRECOM, INC.
CASI/ACME
38-37 STREET
WOODSIDE, NEW YORK 11377

JOB# FJ-26840
DWG# B-504111-43

124-5

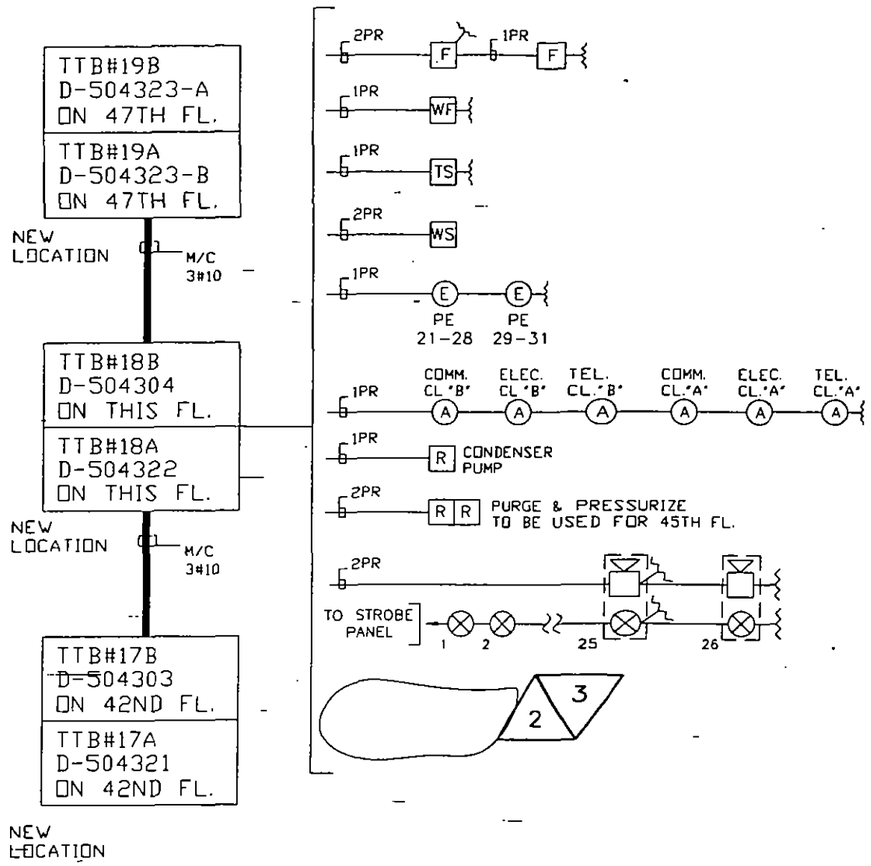

45TH FLOOR

LEGEND	
SYMBOL	DESCRIPTION
TTB	TRANSMISSION TERMINAL BOX
	STROBE LIGHT
	COMB. SPKR/STROBE
	SPEAKER F = FLUSH
A	AREA SMOKE DETECTOR
E	ELEVATOR LOBBY DETECTOR F = FLUSH
H	HEAT DETECTOR
SD	DUCT SMOKE DETECTOR S = SUPPLY R = RETURN
F/C	FUSE CUT-OUT
	FAN SHUTDOWN
R	RELAY
D	DAMPER
DR	DOOR RELEASE
F	MANUAL STATION
WS	WARDEN STATION S = SURFACE F = FLUSH
	END OF LINE RESISTOR
	STAIR SPEAKER
WF	WATERFLOW SWITCH
TS	TAMPER SWITCH
	BI-DIRECTIONAL SPEAKER
ER	ELEVATOR RECALL JUNCTION BOX
J	JUNCTION BOX
EA	ELEVATOR ADVANCE

REV	DATE	BY	DESCRIPTION
3	8/23/99	C.S.	TRANSFERRED ALL EQUIPMENT ADDED IN REV. #2 FROM TTB D-504304 TO TTB D-504948-21 ON 45TH FL. PER FIELD CONDITIONS OF FJ-65133.
2	5/25/99	C.S.	ADDED (1) PAD-2 STROBE PNL W/ASSOC. (18) SPKR/STROBES & (19) STROBES, (6) RELAYS FOR DOOR RELEASE & (1) AREA SMOKE DET. ON 45TH FL. PER FJ-65133.
1	5/25/99	C.S.	RISER REDRAWN. SEE DWG# E-504111-5 SH. 5 FOR REFERENCING PAST REVISIONS.

OFFICE BUILDING
7 WORLD TRADE CENTER
N.Y.C.

CONTRACTOR | ENGINEER

PARTIAL RISER DIAGRAM
45TH FLOOR

FIRECOM, INC.
CASS/ACME
39-27 STREET
WOODSIDE, NEW YORK 11377

DRN	A.S.
APPVD	
CHKD	C.S.
CKD	
DATE	5/25/99
SCALE	N.T.S.
SHEET	1
OF	2
REV	3
JOB#	FJ-26840
DWG#	E-504111-45

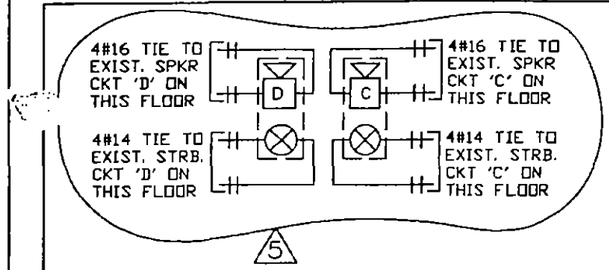

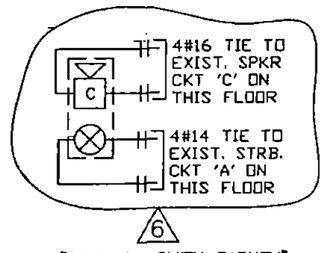

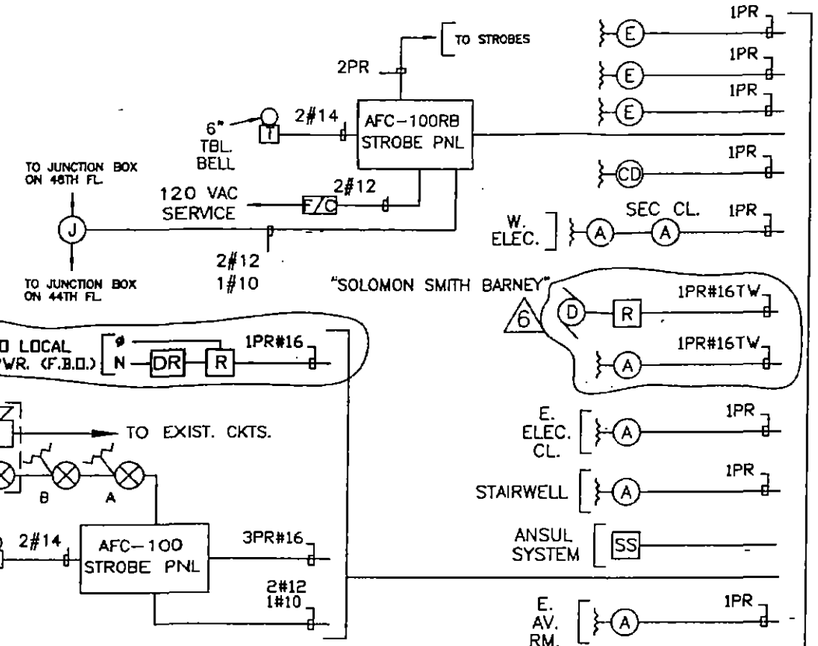

TTB#30B
D-504948-22
ON THIS FL.

TTB#30A
D-504948-21
ON THIS FL.

CURRENT LOOP DATA EXPRESS CABLES TO FIRE COMM. STA.

LEGEND

SYMBOL	DESCRIPTION
TTB	TRANSMISSION TERMINAL BOX
⊗	STROBE LIGHT
▷□⊗	COMB. SPKR/STROBE
▷□	SPEAKER
A	AREA SMOKE DETECTOR
E	ELEVATOR LOBBY DETECTOR
SD	DUCT SMOKE DETECTOR
F/C	FUSE CUT-OUT
⊠	FAN SHUTDOWN
R	RELAY
D	DAMPER
DR	DOOR RELEASE
F	MANUAL STATION
WS	WARDEN STATION
∿	END OF LINE RESISTOR
▶□	STAIR SPEAKER
WF	WATERFLOW SWITCH
TS	TAMPER SWITCH
J	JUNCTION BOX
CD	COMBINATION SMOKE & HEAT DETECTOR
SS	SUB-SYSTEM

7	05/05/00	JM	ADDED (1) RELAY FOR DOOR RELEASE ON 45TH FL. PER LJ-80208.
6	12/20/99	JM	ADDED (1) SPKR./STRB., (1) AREA SMK. DET. & (1) RELAY FOR DAMPER CONTROL ON 45TH FL. FOR "SOLOMON SMITH BARNEY" PER LJ-80021.
5	9/17/99	CS	ADDED (2) SPKR./STRBS. ON 45TH FL. FOR "SOLOMON SMITH BARNEY" PER FJ-65320.
4	9/17/99	CS	CORRECTED FLOOR PAGE CKTS. FROM 'A' & 'B' TO 'C' & 'D' PER FIELD CONDITIONS.
3	8/23/99	CS	ADDED (1) STROBE ON 45TH FL. FOR "SOLOMON SMITH BARNEY" PER FJ-65133-01.
2	8/23/99	CS	TRANFERRED (1) PAD-2 STB. PNL. W/ASSOC. CONN. (18) SPKR./STRBS., (19) STRBS. (6) RELAYS FOR DOOR RELEASE & (1) AREA SMK. DET. FROM TTB D-504304 TO TTB D-504948-21 ON 45TH FL. FOR "SOLOMON SMITH BARNEY" PER FIELD CONDITIONS OF FJ-65133.
1	8/23/99	CS	RISER REDRAWN. SEE DWG# E-504111-5 SH. 5 FOR REFERENCING PAST REVISIONS.

REV	DATE	BY	DESCRIPTION

OFFICE BUILDING
7 WORLD TRADE CENTER
N.Y.C.

CONTRACTOR | ENGINEER

PARTIAL RISER DIAGRAM
45TH FLOOR

FIRECOM, INC.
CASE/ACME
36-27 STREET
WOODSIDE, NEW YORK 11377

DRN	L.H.
APPVD	
ENGR	C.S.
CKD	
DATE	7/2/99
SCALE	N.T.S.
SHEET	2
OF	2
JOB#	FJ-26840
DWG#	B-504111-45
REV	7

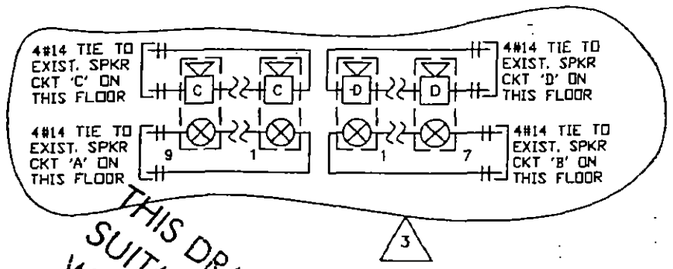

THIS DRAWING IS NOT SUITABLE FOR FILING WITH THE NYC FIRE DEPT. OR BUILDING DEPT.

TTB#19B
D-504323-A
ON THIS FL.

TTB#19A
D-504323-B
ON THIS FL.

NEW LOCATION — M/C 3#10

TTB#18B
D-504304
ON 45TH FL.

TTB#18A
D-504322
ON 45TH FL.

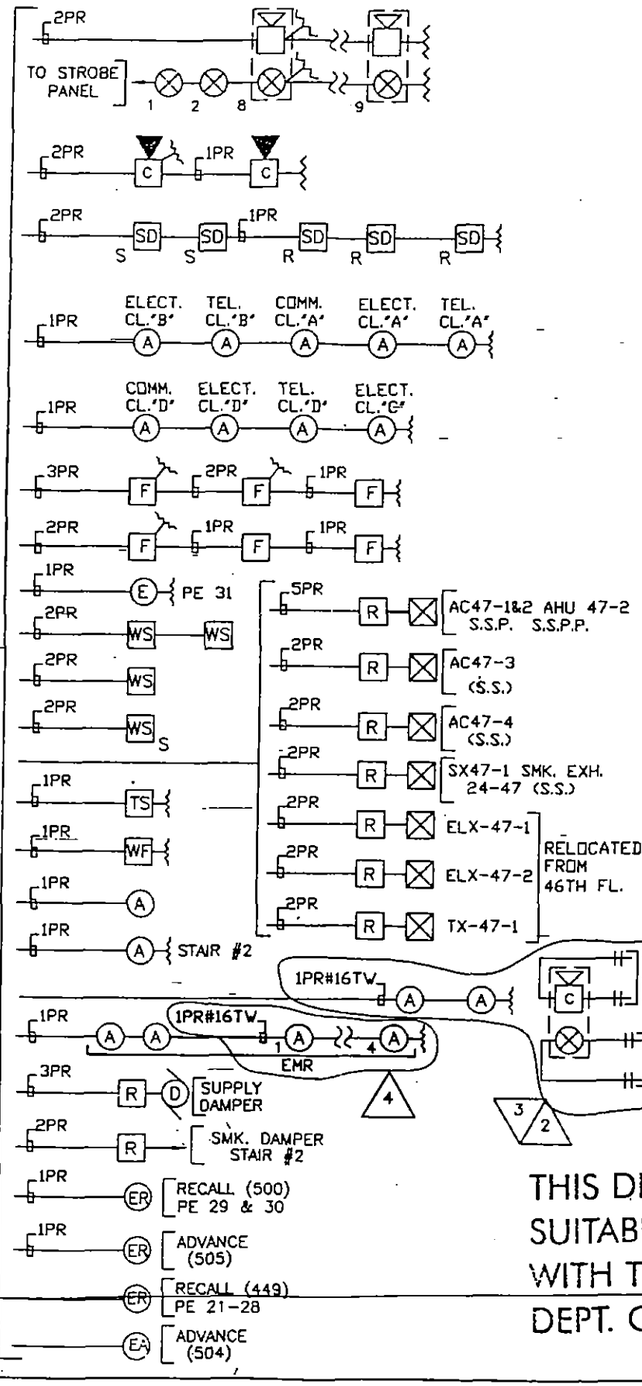

THIS DRAWING IS NOT SUITABLE FOR FILING WITH THE NYC FIRE DEPT. OR BUILDING DEPT.

47TH FLOOR

LEGEND

SYMBOL	DESCRIPTION
TTB	TRANSMISSION TERMINAL BOX
⊗	STROBE LIGHT
▷□⊗	COMB. SPKR/STROBE
▷□	SPEAKER F = FLUSH
A	AREA SMOKE DETECTOR
E	ELEVATOR LOBBY DETECTOR F = FLUSH
H	HEAT DETECTOR
SD	DUCT SMOKE DETECTOR S = SUPPLY R = RETURN
F/C	FUSE CUT-OUT
⊠	FAN SHUTDOWN
R	RELAY
D	DAMPER
DR	DOOR RELEASE
F	MANUAL STATION
WS	WARDEN STATION S = SURFACE F = FLUSH
	END OF LINE RESISTOR
▶□	STAIR SPEAKER
WF	WATERFLOW SWITCH
TS	TAMPER SWITCH
▷□◁	BI-DIRECTIONAL SPEAKER
ER	ELEVATOR RECALL JUNCTION BOX
J	JUNCTION BOX
EA	ELEVATOR ADVANCE

SEP 0 9 2000

4	09/08/00	JM	ADDED (4) AREA SMK. DETS. PER LJ-80393.
3	9/23/99	CS	CORRECTED FLOOR PAGE CKTS. FROM 'A' & 'B' TO 'C' & 'D' PER FIELD CONDITIONS.
2	9/9/98	CS	ADDED (2) AREA SMK. DETS. & (1) SPKR./STROBE ON 47TH FL. PER FJ-64637.
1	9/9/98	CS	RISER REDRAWN. SEE DWG# E-504111-5 FOR REFERENCING PAST REVISIONS.

REV	DATE	BY	DESCRIPTION

OFFICE BUILDING
7 WORLD TRADE CENTER
N.Y.C.

CONTRACTOR | ENGINEER

PARTIAL RISER DIAGRAM
47TH FLOOR

FIRECOM, INC. CASE/ACME
36-27 STREET
WOODSIDE, NEW YORK 11377

DSN	L.H.
APP'VD	
ENGR	C.S.
CKD	
DATE	9/9/98
SCALE	N.T.S.
SHEET	1
OF	2
JOB#	FJ-26840
DWG#	B-504111-47.
REV	4

124-5

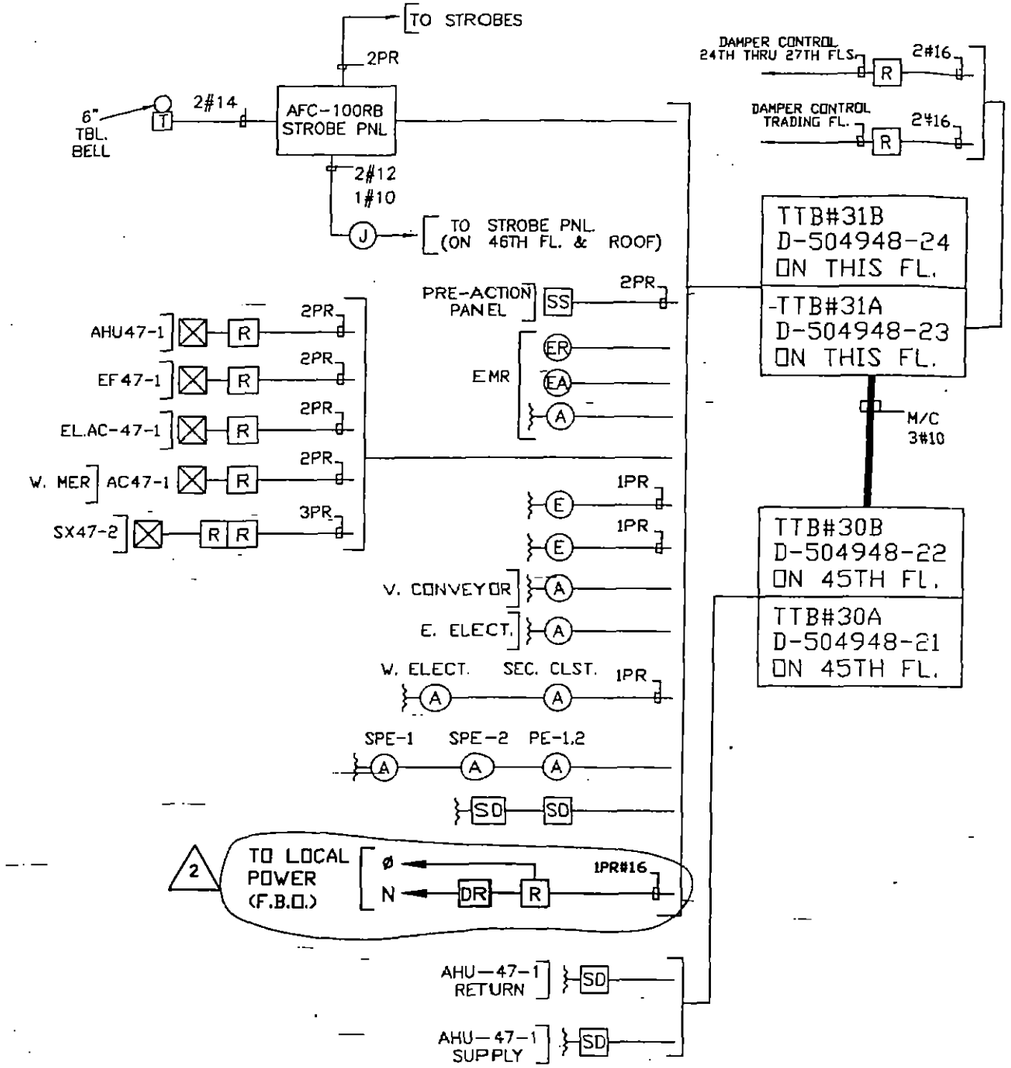

LEGEND

SYMBOL	DESCRIPTION
TTB	TRANSMISSION TERMINAL BOX
⊗	STROBE LIGHT
▷□⊗	COMB. SPKR/STROBE
▷□	SPEAKER F = FLUSH
(A)	AREA SMOKE DETECTOR
(E)	ELEVATOR LOBBY DETECTOR F = FLUSH
(H)	HEAT DETECTOR
SD	DUCT SMOKE DETECTOR S = SUPPLY R = RETURN
F/C	FUSE CUT-OUT
⊠	FAN SHUTDOWN
R	RELAY
(D)	DAMPER
DR	DOOR RELEASE
F	MANUAL STATION
WS	WARDEN STATION S = SURFACE F = FLUSH
~	END OF LINE RESISTOR
▶□	STAIR SPEAKER
WF	WATERFLOW SWITCH
TS	TAMPER SWITCH
▷□◁	BI-DIRECTIONAL SPEAKER
(ER)	ELEVATOR RECALL JUNCTION BOX
(J)	JUNCTION BOX
(EA)	ELEVATOR ADVANCE

REV	DATE	BY	DESCRIPTION
2	05/05/00	JM	ADDED (RELAY FOR DOOR RELEASE ON 47TH FL. PER LJ-80208.
1	9/9/98	JM	RISER REDRAWN. SEE DWG# E-504111-5 FOR REFERENCING PAST REVISIONS.

OFFICE BUILDING
7 WORLD TRADE CENTER
N.Y.C.

CONTRACTOR | ENGINEER

PARTIAL RISER DIAGRAM
47TH FLOOR

FIRECOM, INC.
CASE/ACME
38-27 STREET
WOODSIDE, NEW YORK 11377

DRN	L.H.
APPVD	
ENGR	C.S.
CKD	
DATE	9/9/98
SCALE	N.T.S.
SHEET	2
JOB#	FJ-26840
DWG#	B-504111-47
OF	2
REV	2

47TH FLOOR

QTY	SYMBOL	DESCRIPTION	CAT. NO	BSA NO	WIRE SIZE
	(A) (B)	FLOOR SPEAKER LETTER (A,B) INDICATES CKT. F = FLUSH W = 12Ω-2WL S = SURFACE (BRACKET MTD.) 8Ω-2WL	6348-II 6343-II 6345-II 6343-2	379-73-SA	1PR # 16 TW
	(A) (B)	STAIR SPEAKER LETTER (A,B) INDICATES CKT.	6345-II	379-73-SA	1PR # 16 TW
	(E)	ELEVATOR LOBBY SMOKE DETECTOR S = SURFACE F = FLUSH	PID-C	840-76-SA	1PR # 18 TW/SH
	(A)	AREA SMOKE DETECTOR S = SURFACE F = FLUSH	PID-C	840-76-SA	1PR # 18 TW/SH
	(SD)	DUCT SMOKE DETECTOR S = SUPPLY R = RETURN	AL-DH1	840-76-SA	1PR # 18 TW/SH
	(H)	AREA HEAT DETECTOR	DT-135R	258-72-SA	1PR # 20 TW
	(HD)	DUCT HEAT DETECTOR	DTD-6	378-73-SA	1PR # 20 TW
	(CD)	COMBIN. SMOKE & HEAT DETECTOR SURFACE MTD.			1PR # 18 TW/SH
	(M)	MANUAL STATION S = SURFACE F = FLUSH	230	378-73-SA	1PR # 20TW
	(WS)	WARDEN STATION PR = PUMP ROOM S = SURFACE F = FLUSH	250-11 254-11	379-73-SA	1 PR # 20 TW/SH PR # 20 TW
	(MWS)	COMBIN. MANUAL & WARDEN STATION S = SURFACE F = FLUSH	215	379-73-SA	2PR # 20 TW, 1PR # 20 TW/SH 1PR # 18 TW
	WF	WATERFLOW SWITCH			1PR # 20 TW
	TS	TAMPER SWITCH			1PR # 20 TW
	SD	SUB-SYSTEM	F. B. O.		1PR # 20 TW
	(TTB)	TRANSMISSION TERMINAL BOX SURFACE MTD.		379-73-SA	SEE WIRING DIAGRAM
	(RANI)	REMOTE ANNUNCIATOR S = SURFACE F = FLUSH	CR-251	379-73-SA	2PR # 16, 1 PR # 20 TW 1PR # 20 TW/SH
	(RANII)	REMOTE ANNUNCIATOR	9000	379-73-SA	1 PR # 20 TW/SH, 1PR # 20 TW 3PR # 22 TW/SH, 1PR # 12
	PS	POWER SUPPLY RACK		379-73-SA	SEE WIRING DIAGRAM
	AMP	AMPLIFIER RACK		379-73-SA	SEE WIRING DIAGRAM
	FCS	FIRE COMMAND STATION	8510/8520	379-73-SA	SEE WIRING DIAGRAM
		FAN CONTROL (START_STOP_STATUS)	F. B. O.		2 PR # 14 1 PR # 18 (minm)
	R	INTERFACE RELAY (ONE PER FUNCTION)			1 PR # 20 TW
	(EA)	ELEVATOR RECALL JUNCTION BOX	F. B. O.		1 PR # 16
	FC	FUSE CUTOUT BOX			
		STROBE LIGHT			
	(D)	DAMPER CONTROL	F.B.O		1PR # 16
		END OF LINE RESISTOR FOR SPEAKER CIRCUITS USE 4.7K FOR MANUAL, WARDEN, SMOKE DETECTOR AND OTHERS USE 1.8K			

NOTE: FOR TENANT WIRING OF SPKRS & STROBES CONNECTION REFER TO DWG. 6-103114

NOTE: FOR CROSSED-OUT FLOORS SEE DWG. # B-504111-01,07,02,

NO.	DATE	BY	DESCRIPTION
23	5/4/00	JM	ADDED (1) RELAY FOR DOOR RELEASE ON THE FOLLOWING FLOORS: 3RD THRU 5TH, PER FJ-80208.
22	11/19/98	CS	ADDED (1) RACK & SYNC DET. & (1) RELAY FOR FAN SHUTDOWN ON 3RD FL. FOR "SP1" PER E)-C4744.
21	1/20/98	CS	ADDED (1) RELAY FOR DOOR RELEASE ON THE 3RD FL. PER FJ-82217.
20	7/7/96	LG	ADDED (2) SMOKE DET. ON 3RD FL PER FJ-63694
19	6/14/96	LG	ADDED (4) SPKRS/STROBES TO EXISTING CKTS ON 3RD FL PER FJ# 63044
18	4/18/96	LE	ADDED (5) RELAYS (1) TO BE USED FOR DOOR RELEASE, (2) FAN SHUTDOWN & (1) ALSO FOR INTERFACE AT 3RD FL. PER FJ-82383.
17	3/9/95	TT	ADDED (6) STROBES ON 10TH FL PER 27-61990-01
16	10/25/94	TT	ADDED STRB UNIT-3 PANEL W/ASSOC. (7) LINEARK (1) STRB, (1) 3785, (3) DUCT DET, (3) RELAY FOR FAN SHUTDOWN, (3) RELAY FOR DOOR RELEASE & (1) RELAY FOR REMOTE RELAY, & ON 9 FL. & (8) LINEARK (1) STRB, (1) DUCT DET (1) RELAY FOR FAN SHUTDOWN, (1) RELAY FOR DOOR RELEASE & (1) ASSOC. ZONE MODULE (SEE DWG. FOR DETAILS) PER FJ-82383
15	4/20/94	TT	ADDED (3) SPEAKERS AND (3) STROBES ON 8TH FLOOR AS PER FJ-61493
14	1/28/94	LE	ADDED RELAYS TO DOOR RELEASE SYSTEM ON 7TH & 8TH FLOORS AS PER FJ-61936
13	12/23/93	TT	REVISED PER AS BUILT
12	12/21/93	TT	ADDED AFC-101 W/ASSOC 9 STROBES 5 SPKRS, 1 HEAT DET, 1 DUCT DET, TOC & 1 RELAY FOR FAN SHUTDOWN ON 8TH FL. ADDED AFC-101 W/ASSOC 14 STROBES, 9 SPKRS, 5 SYSTEM, MANUAL STATION, DUCT DET, FAN SHUTDOWN PER FJ 61453
11	1/4/93	BD	ADDED POWER SUPPLY & TTB RISER AS PER FJ-60710
10	9/10/92	TS	ADDED DOOR RELEASE ON 3RD FL PER FJ-60710 (SALOMON BROTHERS INC.)
9	5/5/92	BD	ADDED DOOR RELEASE RELAY ON 5TH FL. PER FJ-60197
8	4/22/92	BD	ADDED WATERFLOW SWITCH & TAMPER SWITCH VIA TTB #2B ON 5TH FL. PER FJ-60197
7	6/10/91	BD	ADDED AFC-100, 9 I/C, 6 T-SPKR ON 6TH FL. PER FJ-58874
6	04/04/91	BD	ADDED TTB, RELAY ON 6TH FL., MANUAL SYSTEM, PRESSURIZATION SYSTEM (RELAY (PURGE) ON 4TH FL. RELAY (PURGE) ON 5TH FL. RELAY (PURGE) ON 7TH FL. & 2ND FLOOR PER FJ-28687-16
5	10-10-90	BD	ADDED 2 DET. 1 PFL 2 SPKR 2 STROBE 2ND FL. 1 MSP 4 SPKR/STROBE 3RD FL. 1 MS & 1 SPKR/STROBE 5TH FL. FJ 28247
4	6-27-90	BD	REVISED ANNUNCIATOR STRIPPING & SPKR/STROBE PER FJ-28383
3	6-21-90	BD	ADDED DOOR RELEASE ON 3RD FL PER FJ 28383
2	4-4-90	TP	REVISED PER RETURN SUBMISSION
1	10-26-89	JP	REVISED PER FJ-28889
		TP	REDRAWN / GENERAL REVISION

7 WORLD TRADE CENTER
NEW YORK, NEW YORK
1ST FL. – 10TH FL.

FIRE ALARM SYSTEM
RISER DIAGRAM

DWN. SJ
APPVD.
ENGR. JP
CKD.
DATE 5-4-89
SHEET 1 OF 1
JOB NO. FJ-26840
E-504111-Z3

FIRECOM INCORPORATED
☐ FIRE CONTROLS DIV.
☐ COMMERCIAL RADIO-SOUND DIV.

WTCI-124-S

QTY	SYMBOL	DESCRIPTION	CAT. NO	BSA NO.	WIRE SIZE
	A / B	FLOOR SPEAKER LETTER (A,B) INDICATES CKT. F = FLUSH W = UNI-DIR. S = SURFACE (BRACKET MTD.) BI-DIR.	6348-11 6345-11 6345-0 6345-B	379-73-SA	1 PR @ 18 TW
	A / B	STAIR SPEAKER LETTER (A,B) INDICATES CKT.	6345-11	379-73-SA	1 PR @ 16 TW
	E	ELEVATOR LOBBY SMOKE DETECTOR S = SURFACE F = FLUSH	PID-C	840-76-SA	1 PR @ 18 TW/SH
	A	AREA SMOKE DETECTOR S = SURFACE F = FLUSH	PID-C	840-76-SA	1 PR @ 18 TW/SH
	DD	DUCT SMOKE DETECTOR S = SUPPLY R = RETURN	AL-DH1	840-76-SA	1 PR @ 18 TW/SH
	H	AREA HEAT DETECTOR	DF-135R	258-72-SA	1 PR @ 20 TW
	HD	DUCT HEAT DETECTOR	DTD-4	378-73-SA	1 PR @ 20 TW
	CD	COMBIN. SMOKE & HEAT DETECTOR SURFACE MTD.			1 PR @ 18 TW/SH
	M	MANUAL STATION S = SURFACE F = FLUSH	230	378-73-SA	1 PR @ 20 TW
	WS	WARDEN STATION PH = PUMP ROOM S = SURFACE F = FLUSH	250-11 254-11	379-73-SA	1 PR @ 20 TW/SH 1 PR @ 20 TW
	MWS	COMBIN. MANUAL & WARDEN STATION S = SURFACE F = FLUSH	215	379-73-SA	2 PR @ 20 TW, 1 PR @ 20 TW/SH 1 PR @ 18 TW
	WF	WATERFLOW SWITCH			1 PR @ 20 TW
	TS	TAMPER SWITCH			1 PR @ 20 TW
	SS	SUB-SYSTEM	F. B. O.		1 PR @ 20 TW
	TTB	TRANSMISSION TERMINAL BOX SURFACE MTD.		379-73-SA	SEE WIRING DIAGRAM
	ANN I	REMOTE ANNUNCIATOR S = SURFACE F = FLUSH	CR-251	379-73-SA	2 PR @ 18, 1 PR @ 20 TW 1 PR @ 20 TW/SH
	ANN II	REMOTE ANNUNCIATOR	9000	379-73-SA	1 PR @ 20 TW/SH, 1 PR @ 20 TW 3 PR @ 22 TW/SH, 2 PR @ 12
	PS	POWER SUPPLY RACK		379-73-SA	SEE WIRING DIAGRAM
	AMP	AMPLIFIER RACK		379-73-SA	SEE WIRING DIAGRAM
	FCS	FIRE COMMAND STATION	8510/8520	379-73-SA	SEE WIRING DIAGRAM
	FCS	FAN CONTROL (START, STOP, STATUS)	F. B. O.		2 PR @ 14 1 PR @ 18 (comm)
	R	INTERFACE RELAY (ONE PER FUNCTION)			1 PR @ 20 TW
	RR	ELEVATOR RECALL JUNCTION BOX	F. B. O.		1 PR @ 16
	T/C	FUSE CUTOUT BOX			
	⊗	STROBE LIGHTS			
	RL	RED MOTE LAMP			
	AEC	EOL END OF LINE TERMINAL (APPROVED STYLES TO BE PER REFER DWG. E-503454)			
	1.3 / 2	END OF LINE RESISTOR FOR SPEAKER CIRCUITS USE 4.7K FOR MANUAL, WARDEN, SMOKE DETECTOR AND OTHERS USE 1.8K			
	⊗ ⊠	COMB. SPKR/STROBE			

NOTE: FOR TENANT WIRING SPKRS & STROBES CONNECTION REFER TO DWG E-103114

NOTE:
FOR CROSSED-OUT FLOORS SEE DWG. # B-504111-13, 20

REV.	DATE	BY	DESCRIPTION
18	11/5/97	CS	ADDED (1) DUCT SMOKE DET. & (1) RELAY FOR FAN SHUTDOWN ON 18TH FL. PER FJ-69117
17	12/9/96	T.T.	ADDED (2) SPKR/STROBES & (1) DUCT SMOKE DETECTOR & (1) FAN SHUTDOWN ON 18TH FLOOR PER FJ-63401
16	6/24/96	L.E	ADDED (2) DUCT DETECTORS (2) RELAYS FOR FAN SHUTDOWN ON 20TH FL PER FJ-62062
15	5/14/96	L.G	ADDED (5) SPKR./STROBES (5) STROBE LIGHTS (1) RELAY FOR FAN SHUTDOWN (1) DUCT DET. (1) RELAY FOR DOOR REL. ON 19TH FL PER FJ-62419
14	5/2/96	L.G	ADDED (5) SPKR./STROBES (1) WATERFLOW ON 20TH FL PER FJ-62445
13	3/20/96	LE	DELETED (1) SPKR. & (1) STROBE ON 13TH FL. ADDED (1) SPKR./STROBE ON 18TH FLOOR PER FJ-62413-01 FOR S.E.C.
12	2/7/96	LE	ADDED (1) SPKR/STROBE AND (1) STROBE TO EXISTING CIRCUIT ON 13TH FLOOR PER FJ-62418.
11	4/26/95	JD	ADDED (1) COMB-SPKR./STROBE AND (1) STROBE TO EXISTING CIRCUITS ON 15TH FLOOR PER FJ-62282.
10	C-14-93	JPE	ADDED DOOR RELEASE RELAY 18TH FLOOR per FJ-60911-01
9	1-11-93	JPE	ADDED AFC-101 STROBE PNL w/ABOVE (2) STROBE LIGHTS - ADDED (14) SPKRS TO EXISTING CKT ON 18TH FL. PER FJ-60911.
8	10-93	BD	ADDED TTB #8&9A AS PER FJ-60844.
7	9/22/92	BD	REVISED FJ-60656 PER RETURNED SUBMISSION.
6	7/13/92	BD	ADDED (2) AFC-101, 3/4 SPKR/STROBE, AREA DET & RELAY, MAG DOOR RELEASE ON 11TH FLOOR. ADDED (2) AFC-101, 3/4 SPKR/STROBE, AREA DETECTORS, RELAY, MAG DOOR RELEASE, DUCT DETECTOR, FAN SHUTDOWN, TTB EXTENDER ON 16TH FLOOR. ADDED (1) SPKR/STROBE, (1) DUCT DET. (2) RELAYS FOR FAN SHUTDOWN ON 15TH FLOOR. PER FJ-60656
5	4/20/91	BD	ADDED AREA DET. ON 18TH FL. PER FJ-60131.
4	8/28/91	BD	ADDED CONFIRMATION STROBES/STROBE (2) ON 14TH FL & (8) ON 20TH FL AS PER FT-24865-0202.
3	4/26/91	BD	ADDED FAN SHUTDOWN, DUCT DET., TTB, STROBE PER FJ 23560
2	11/0990	B.D.	ADDED STR PNL SPKRS/STROBES, FAN SHUTDOWN ON 14TH THRU 18TH FL., SUB-SYSTEMS TO 14TH FL. PER FJ-23466
1		JP	REDRAWN/GENERAL REVISION

7 WORLD TRADE CENTER
NEW YORK, NEW YORK
11TH - 20TH FL.

FIRE ALARM SYSTEM
RISER DIAGRAM

DWN. SJ
APPVD.
ENGR. J P
CKD.
DATE 5-6-88
SCALE

FIRECOM INCORPORATED
☐ FIRE CONTROLS DIV.
☐ COMMERCIAL RADIO-SOUND DIV.

JOB NO. FJ-26840
DWG E-504112 REV 18

QTY	SYMBOL	DESCRIPTION	CAT. NO.	BSA NO.	WIRE SIZE
	A / B	FLOOR SPEAKER LETTER (A,B) INDICATES CKT. F = FLUSH W = UNI-DIR. S = SURFACE (BRACKET MTD.) BI-DIR.	6348-11 6343-11 6345-11 6343-12	379-73-5A	1 PR @ 16 TW
	A / B	STAIR SPEAKER LETTER (A,B) INDICATES CKT.	6345-11	379-73-5A	1 PR @ 16 TW
	E	ELEVATOR LOBBY SMOKE DETECTOR S = SURFACE F = FLUSH	PID-C	840-76-5A	1 PR @ 18 TW/SH
	A	AREA SMOKE DETECTOR S = SURFACE F = FLUSH	PID-C	840-76-5A	1 PR @ 18 TW/SH
	RD	DUCT SMOKE DETECTOR S = SUPPLY R = RETURN	AL-DH1	840-76-5A	1 PR @ 18 TW/SH
	H	AREA HEAT DETECTOR	ST-1384	258-72-5A	1 PR @ 20 TW
	HD	DUCT HEAT DETECTOR	DTD-6	378-73-5A	1 PR @ 20 TW
	CO	COMBIN. SMOKE & HEAT DETECTOR SURFACE MTD.			1 PR @ 18 TW/SH
	M	MANUAL STATION S = SURFACE F = FLUSH	230	378-73-5A	1 PR @ 20 TW
	WS	WARDEN STATION PR = PUMP ROOM S = SURFACE F = FLUSH	250-11 254-11	379-73-5A	1 PR @ 20 TW/SH
	MWS	COMBIN. MANUAL & WARDEN STATION S = SURFACE F = FLUSH	215	379-73-5A	2 PR @ 20 TW, 1 PR @ 20 TW/SH 1 PR @ 18 TW
	WF	WATERFLOW SWITCH			1 PR @ 20 TW
	TS	TAMPER SWITCH			1 PR @ 20 TW
	SD	SUB-SYSTEM	F.B.O.		1 PR @ 20 TW
	TTB	TRANSMISSION TERMINAL BOX SURFACE MTD.		379-73-5A	SEE WIRING DIAGRAM
	RANT	REMOTE ANNUNCIATOR S = SURFACE F = FLUSH	CR-251	379-73-5A	2 PR @ 16, 1 PR @ 20 TW 1 PR @ 20 TW/SH
	RANT	REMOTE ANNUNCIATOR	9000	379-73-5A	1 PR @ 20 TW/SH, 2 PR @ 20 TW 3 PR @ 22 TW/SH, 2 PR @ 12
	PS	POWER SUPPLY RACK		379-73-5A	SEE WIRING DIAGRAM
	AMP	AMPLIFIER RACK		379-73-5A	SEE WIRING DIAGRAM
	FCS	FIRE COMMAND STATION	8510/8520	379-73-5A	SEE WIRING DIAGRAM
		FAN CONTROL (START_STOP_STATUS)	F.B.O.		2 PR @ 18 1 PR @ 18 (status)
	R	INTERFACE RELAY (ONE PER FUNCTION)			1 PR @ 20 TW
	EA	ELEVATOR RECALL JUNCTION BOX	F.B.O.		1 PR @ 16
	F/C	FUSE CUTOUT BOX			
		STROBE LIGHTS			1 PR #14
		COMB. SPKR./STROBE			1 PR #14
		END-OF-LINE RESISTOR FOR SPEAKER CIRCUITS USE 4.7K FOR MANUAL, WARDEN, SMOKE DETECTOR AND OTHERS USE 1.8K			

NOTE: FOR TENANT WIRING SPKRS & STROBES CONNECTION REFER TO DWG 6-103114

NOTE: FOR CROSSED-OUT FLOORS SEE DWG. # B-504111-23, 30, 24, 22,

REV.	DATE	BY	DESCRIPTION
33	5/4/00	JM	ADDED (1) RELAY FOR DOOR RELEASE ON THE FOLLOWING FLOORS (21ST & 25TH THRU 30TH) PER L.L. 5/2000.
32	4/22/98	CS	ADDED (3) SPKR./STROBES ON THE 22ND FL., PER FJ- 64400.
31	6/15/97	CS	ADDED (1) STROBE LIGHT ON 21ST FL PER FJ -63964
30	7/22/97	CS	ADDED (4) SPEAKERS & (6) STROBES ON 25TH FL PER FJ-63837
29	5/20/97	T.T.	ADDED (1) SPKR/STROBE ON 21ST FL. PER FJ-63762
28	4/9/97	LE	ADDED (4) SPKRS./STROBES ON 21ST FLOOR PER FJ-63685 FOR "SOLOMON BROS" (F&O).
27	4/7/97	CS	ADDED (1) RELAY FOR DOOR RELEASE ON 21ST FL PER FJ- 63677
26	9/13/96	L.G.	ADDED (1) SPKR ON 21ST FL PER FJ-63243
25	7/9/96	JD	ADDED (4) SPKRS./STROBES, (4) STROBES, (2) SPEAKERS TO 21ST CKT. ADDED (1) SWITCHES (SET) (1) MANUAL PULL & DOOR RELEASE ON 21ST FLR. FOR FIRST STATE MGMT. PER FJ-63512.
24	8/7/96	LE	ADDED (3) SPKRS./STROBES (7) STROBES ON 22ND FLOOR PER FJ-64147 FOR "FEDERAL HOME"
23	3/27/96	TT	ADDED (2) COMB. SPKR/STRBS, (1) DUCT DET, (1) 24-V FOR FAN SHUTDOWN ON 21ST FLOOR AS PER FJ-62858
22	1/16/96	JD	ADDED PREACTION PANEL TBL. AND ALARM ON 26TH FLOOR PER AS BUILT.
21	1/10/96	JD	ADDED (6) STROBES ON 25TH & 27TH FL. PER FJ 62532 -02.
20	1/9/96	JD	REVISED WIRING SYSTEM TO PREACTION ALARM & TROUBLE DESIGN PER FJ- 62532-01
19	10/19/95	JD	ADDED DUCT SMOKE DET. W/ ASSOC. FAN START/STOP ON 21ST & 27TH FLOORS PER FJ-62532-01 FOR STD. CHARTERED BANK
18	9/13/95	JD	PER FJ-62532 25TH & 27TH FLOOR: ADDED STROBE PANEL WITH ASSOCIATED WIRING WORK - ADDED 3 SPEAKERS & 3 STROBES ON 25TH FLOOR. ADDED 1 SPEAKER & 1 STROBE ON 27TH FLOOR. ADDED 1 SPEAKER & 1 STROBE ON 25TH FLOOR FOR FAN SHUTDOWN. 21ST FLOOR: ADDED (1) DUCT DETECTOR, (1) FAN SHUTDOWN, 1 PR #16 TWSH, 1 PR #14 TWSH. ALM & TBL.
17	5/10/94	L.E.	ADDED PRE-ACTION PANEL ON 22ND FLOOR AS PER FJ-61655-01
16	4/21/94	L.E.	ADDED (2) STROBE PULL W/ ASSOC. (3) STROBES, (1) TROUBLE BELL (2) FAN CUT-OUT. ALSO ADDED (5) SMK. DUCT DETS. (5) FAN SHUTDOWN AND PRE-ACTION PANEL FOR ALARM & TBL. ON 22ND FL. PER FJ-61655
15	3/26/93	T.D.	ADDED (10) COMBINATION SPEAKERS/STROBES ON 28TH FLR. FOR SOLOMON BROTHERS PER FJ- 61246 -03
14	1/12/93	L.E.	REPLACED (3) DUCT DETS WITH COMB. SMOKE/HEAT DET. ON 25TH FLR AS PER FJ-61256-04
13	8-31-93	AS	ADDED (6) COMB. SPKR./STROBES TO EXIST. CKTS.
12	1/4/93	BD	ADDED (4) DUCT SMK DET ON NEW SUPPLY & (1) RELAY FOR FAN SHUTDOWN AS PER FJ-61296 ON 28TH FL. ADDED TTB RISER AS PER FJ-60244.
11	10/26/92	AS	ADDED TTB RISER AS PER FJ-60244.
10	8/25/92	BD	ADDED (2) SMOKE DETECTOR ON 25TH FL PER FJ-60228.
9	7/22/92	BD	ADDED AREA DET. ON 21ST FL, AS PER FJ- 21865-09
8	4/22/92	BD	ADDED RISER SYSTEM PRECAUTION PANEL ON 28TH FL. AS PER FJ- 24994.
7	4/9/92	BD	ADDED 2PR #20 TW, 1PR, 6" T-BELL, 15 SPKRS, 5 SPKR/STROBES ON 21ST FL. AS PER FJ-24865.
6	11-12-90	BD	ADDED PRE-ACTION SYST. ON 23RD FL THRU 32ND FL 34TH, 35TH, 38TH FL. THRU 47TH FL & 49TH FL PER FJ-23823
5	6-21-90	BD	ADDED 17 SPKRS/STROBE ON 30TH FL PER FJ 22444
4	6/12/90	BD	ADDED 19 SPKRS/STROBE ON 26TH FL PER FJ 22089
3	6-21-89	BD	ADDED DOOR RELEASE ON 28 TH FL PER FJ 24253
2	4-4-89	TP	REVISED FIRE RETURN SUBMISSION
1	10-24-88	TP	REVISED PER FT-28823
		JT	RED RANN / GENERAL REVISION

7 WORLD TRADE CENTER
NEW YORK, NEW YORK
21STFL - 30TH FL.

FIRE ALARM SYSTEM
RISER DIAGRAM

DWN. SJ
APPVD.
ENGR. JP
CHD.
DATE 2-6-85
SCALE NONE

FIRECOM INCORPORATED
☐ FIRE CONTROLS DIV.
☐ COMMERCIAL RADIO-SOUND DIV.

JOB NO. FJ 22844
DWG. NO. E-504144 33

124-5

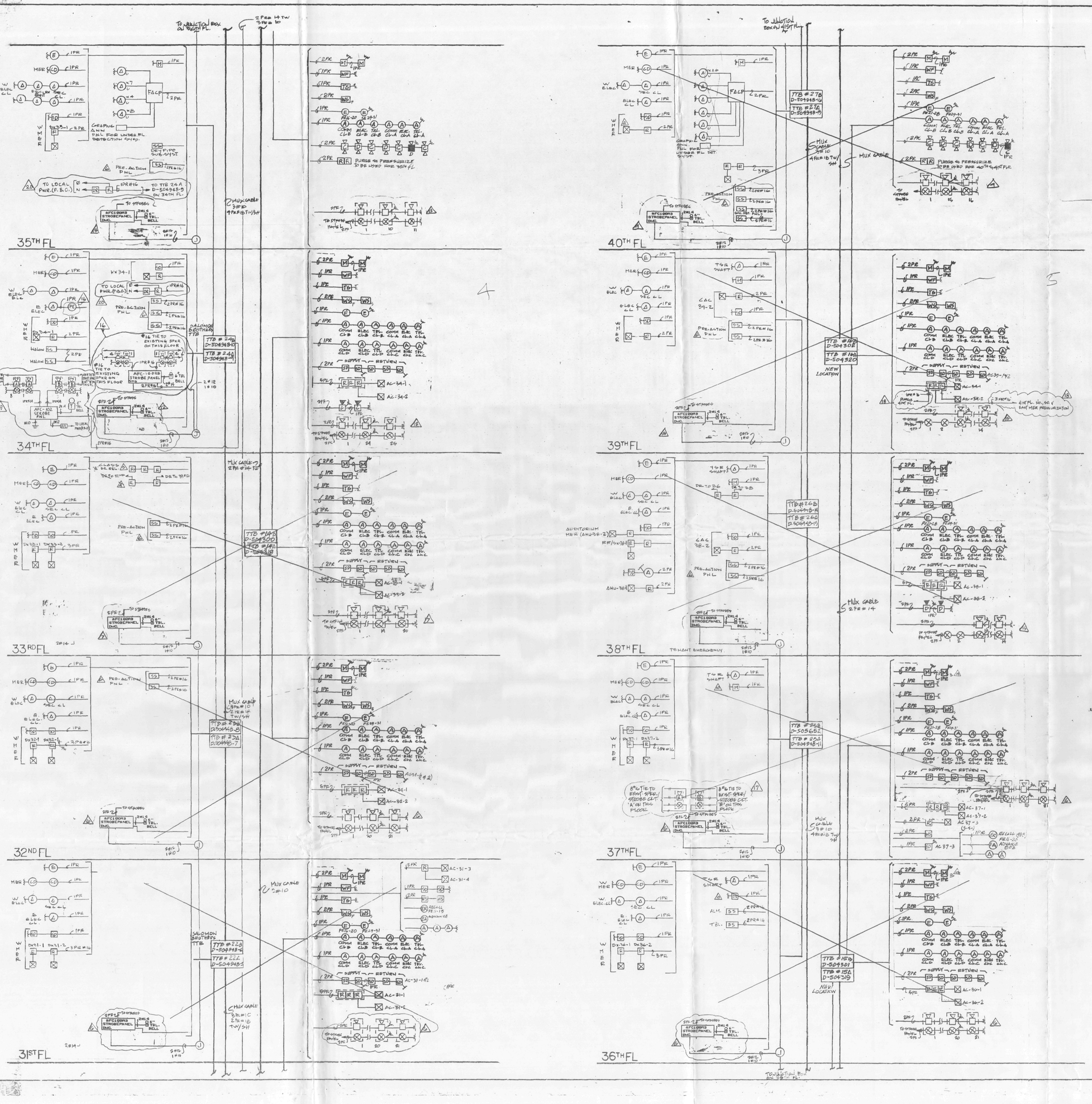

QTY	SYMBOL	DESCRIPTION	CAT. NO.	BSA NO.	WIRE SIZE
	A	FLOOR SPEAKER LETTER (A,B) INDICATES CKT. F = FLUSH W = UNI-DIR. S = SURFACE (BRACKET MTD.) BI-DIR.	6348-II 6345-II 6345-II 6343-II	379-73-SA	1 PR @ 18 TW
	A B	STAIR SPEAKER LETTER (A,B) INDICATES CKT.	6345-II	379-73-SA	1 PR @ 18 TW
	E	ELEVATOR LOBBY SMOKE DETECTOR S = SURFACE F = FLUSH	PID-C	840-76-SA	1 PR @ 18 TW/SH
	A	AREA SMOKE DETECTOR S = SURFACE F = FLUSH	PID-C	840-76-SA	1 PR @ 18 TW/SH
	SD	DUCT SMOKE DETECTOR S = SUPPLY R = RETURN	AL-DH1	840-76-SA	1 PR @ 18 TW/SH
	H	AREA HEAT DETECTOR	DT-135R	256-72-SA	1 PR @ 20 TW
	HD	DUCT HEAT DETECTOR	DTD-4	378-73-SA	1 PR @ 20 TW
	CD	COMBIN. SMOKE & HEAT DETECTOR SURFACE MTD.			1 PR @ 18 TW/SH
	M	MANUAL STATION S = SURFACE F = FLUSH	230	378-73-SA	1 PR @ 20 TW
	WS	WARDEN STATION PR = PUMP ROOM S = SURFACE F = FLUSH	250-II 254-II	378-73-SA	1 PR @ 20 TW/SH 1 PR @ 20 TW
	MWS	COMBIN. MANUAL & WARDEN STATION S = SURFACE F = FLUSH	215	378-73-SA	2 PR @ 20 TW, 1 PR @ 20 TW/SH 1 PR @ 16 TW
	WF	WATERFLOW SWITCH			1 PR @ 20 TW
	TS	TAMPER SWITCH			1 PR @ 20 TW
	SD	SUB-SYSTEM	F. B. O.		1 PR @ 20 TW
	TTB	TRANSMISSION TERMINAL BOX SURFACE MTD.		379-73-SA	SEE WIRING DIAGRAM
	RANI	REMOTE ANNUNCIATOR S = SURFACE F = FLUSH	CR-2SI	379-73-SA	2 PR @ 16, 1 PR @ 20 TW 1 PR @ 20 TW/SH
	RANII	REMOTE ANNUNCIATOR	9000	379-73-SA	1 PR @ 20 TW/SH, 1 PR @ 20 TW 3 PR @ 22 TW/SH, 2 PR @ 12
	PS	POWER SUPPLY RACK		379-73-SA	SEE WIRING DIAGRAM
	AMP	AMPLIFIER RACK		379-73-SA	SEE WIRING DIAGRAM
	FCS	FIRE COMMAND STATION	8510/8520	379-73-SA	SEE WIRING DIAGRAM
		FAN CONTROL (START, STOP, STATUS)	F. B. O.		2 PR @ 14 1 PR @ 18 (status)
	R	INTERFACE RELAY (ONE PER FUNCTION)			1 PR @ 20 TW
	EA	ELEVATOR RECALL JUNCTION BOX	F. B. O.		1 PR @ 16
	T/C	FUSE CUTOUT BOX			
		STROBE LIGHTS			
		END OF LINE RESISTOR FOR SIGNAL CIRCUITS USE 4.7K FOR MANUAL, WARDEN, SMOKE DETECTOR AND OTHERS USE 1.8K			

NOTE: FOR TENANT WIRING OF SPKRS/STROBES CONNECTION REFER TO DWG. E-1013114

NOTE: FOR CROSSED-OUT FLOORS SEE DWG. # 8-504111-39,37, 38,40,31,32,33,36,

REV	DATE	BY	DESCRIPTION
20	5/4/00	JM	ADDED (1) RELAY FOR DOOR RELEASE ON THE FOLLOWING FLOORS 34TH & 35TH PER FJ-80205.
19	5/28/97	TT	ADDED NEW AFC-102 STROBE PNL (16) SPEAKER/STROBES ON 34TH FL PER FJ-63788.
18	9/8/97	JD	ADDED CONNECTIONS FOR PRESSURIZATION/PURGE ON 35TH FL PER FJ-61196.
17	12/5/96	JD	ADDED (6) SPKRS/STROBES TO EXIST. CKT. ON 37TH FLOOR PER FJ-62066.
16	8-31-95	AS	ADDED STROBE PANEL & B-COMB/SPKR STROBES & I-PE. DETECTOR ON 34TH FLOOR AS PER FJ-61296 AND FJ-61296-08
15	9-17-90	BD	ADDED 14 COMB/STROBES/ISTR ON 35TH FL & 19 COMB/SPKRS/ISTR ON 39TH FL PER FJ-27485
14	7-9-90	BD	ADDED MANUAL STATION ON 36TH, 37TH FL PER FJ 29037
13	7-9-90	BD	ADDED 11 SPKRS/STR ON 35TH FL PER FJ-27443
12	"	"	ADDED 23 SPKRS/STROBE ON 34TH FL PER FJ-27495
11			
10	7-9-90	BD	ADDED 19 SPKRS, STROBES ON 32ND, 33RD FL PER FJ-27497
9	7-9-90	BD	ADDED 14 SPKRS STROBES ON 40 TH FL PER FJ-1277
8			
7	6-21-90	BD	ADDED 20 SPEAKER/STROBE ON 31ST FL PER FJ-27499
6	6-21-90	BD	ADDED 19 SPEAKER/STROBES ON 31ST, 32ND, FLOOR PER FJ-27054
5	6-1-90	BD	CLOSING DOOR RELEASE RELAYS (PER DWG E-7)
4	6-21-90	BD	ADDED DOOR RELEASE RELAYS OF 3, 32ND FL FLOOR FJ-27253
3	4-4-90	JP	REVISED PEC RETURN SUBMISSION
2	4-17-90	JP	REVISED PER CONTRACT DWG C-340 ON 40TH FLR. PER FT-29029
1	12-1-89	JP	REVISED PER FT-28838
		JP	REDRAWN / GENERAL REVISION

7 WORLD TRADE CENTER
NEW YORK, NEW YORK
31ST FL - 40TH FL.

FIRE ALARM SYSTEM
RISER DIAGRAM

DWN. SJ | APPVD | ENGR. JP | CKD | DATE 5-2-89 | SCALE

FIRECOM INCORPORATED
☐ FIRE CONTROLS DIV.
☐ COMMERCIAL RADIO-SOUND DIV.

JOB NO. FJ-26840 | SHEET 5 OF 5 | DWG. E-504111-4 | REV 20

124-5

QTY	SYMBOL	DESCRIPTION	CAT. NO.	BSA NO.	WIRE SIZE
	A / B	FLOOR SPEAKER LETTER (A,B) INDICATES CKT. F = FLUSH W = UNI-DIR. S = SURFACE (BRACKET MTD.) BI-DIR.	6348-11 6343-11 6345-11 6343-21	379-73-5A	1 PR @ 16 TW
	A / B	STAIR SPEAKER LETTER (A,B) INDICATES CKT.	6345-11	379-73-5A	1 PR @ 16 TW
	E	ELEVATOR LOBBY SMOKE DETECTOR S = SURFACE F = FLUSH	PID-C	840-76-5A	1 PR @ 18 TW/SH
	A	AREA SMOKE DETECTOR S = SURFACE F = FLUSH	PID-C	840-76-5A	1 PR @ 18 TW/SH
	DD	DUCT SMOKE DETECTOR S = SUPPLY R = RETURN	AL-DH1	840-76-5A	1 PR @ 18 TW/SH
	H	AREA HEAT DETECTOR	ST-135R	258-72-5A	1 PR @ 20 TW
	DD	DUCT HEAT DETECTOR	DTD-6	378-73-5A	1 PR @ 20 TW
	CD	COMBIN. SMOKE & HEAT DETECTOR SURFACE MTD.			1 PR @ 18 TW/SH
	M	MANUAL STATION S = SURFACE F = FLUSH	230	378-73-5A	1 PR @ 20 TW
	WS	WARDEN STATION PB = PUMP ROOM S = SURFACE F = FLUSH	250-11 254-11	379-73-5A	1 PR @ 20 TW/SH 1 PR @ 20 TW
	MWS	COMBIN. MANUAL & WARDEN STATION S = SURFACE F = FLUSH	255	379-73-5A	2 PR @ 20 TW, 1 PR @ 20 TW/SH 1 PR @ 18 TW
	WF	WATERFLOW SWITCH			1 PR @ 20 TW
	TS	TAMPER SWITCH			1 PR @ 20 TW
	SS	SUB-SYSTEM	F.B.O.		1 PR @ 20 TW
	TTB	TRANSMISSION TERMINAL BOX SURFACE MTD.		379-73-5A	SEE WIRING DIAGRAM
	RANT	REMOTE ANNUNCIATOR	CR-251	379-73-5A	2 PR @ 16, 1 PR @ 20 TW 1 PR @ 20 TW/SH
	RANT	REMOTE ANNUNCIATOR	9000	379-73-5A	1 PR @ 20 TW/SH, 1 PR @ 20 TW 3 PR @ 22 TW/SH, 2 PR @ 22
	PS	POWER SUPPLY RACK		379-73-5A	SEE WIRING DIAGRAM
	AMP	AMPLIFIER RACK		379-73-5A	SEE WIRING DIAGRAM
	FCS	FIRE COMMAND STATION	850/8520	379-73-5A	SEE WIRING DIAGRAM
		FAN CONTROL (START, STOP, STATUS)	F.B.O.		2 PR @ 14 1 PR @ 18 (status)
	R	INTERFACE RELAY (ONE PER FUNCTION)			1 PR @ 20 TW
	ER	ELEVATOR RECALL JUNCTION BOX	F.B.O.		1 PR @ 16
	F/C	FUSE CUTOUT BOX			
	⊗	STROBE LIGHTS			
		END OF LINE RESISTOR FOR SPEAKER CIRCUITS USE 4.7K FOR MANUAL, WARDEN, SMOKE DETECTOR AND OTHERS USE 1.8K			

NOTE: FOR TENANT SPKRS. & STROBES CONNECTIONS REFER TO DWG C-103114

NOTE:
FOR CROSSED-OUT FLOORS SEE DWG. #S-504111-47, 45, 41, 42, 43

REV.	DATE	BY	DESCRIPTION
18	5/4/00	JM	ADDED (1) RELAY FOR DOOR RELEASE ON THE FOLLOWING FLOORS: 44TH & 46TH PER FJ-30208.
17	1-15-98	CS	ADDED (1) MANUAL PULL STATION ON THE 47TH FL. FOR SOLOMON BROTHERS. PER FJ-64258.
16	6/2/97	TT	ADDED (5) SPEAKER/STROBES & (2) MANUAL PULL STATIONS ON 47TH FLOOR PER FJ-63789.
15	3/3/97	JD	ADDED CONNECTIONS FOR PRESSURIZATION FANS EL-AC-1 AND EL-AC-2 AND CONNECTIONS FOR DAMPERS ON 47TH FL. PER FJ-63574
14	12/13/91	C.S.	ADDED (1) SPEAKER STROBE ON 47TH FL. PER FJ-63574
13	7/24/96	JD	REVISED PER AS BUILT.
12	5/9/96	BT	ADDED CO2 SMOKE & HEAT DET. ON 41ST & 43RD FLOORS PER FJ-29695
11	1-31-96	MTR	ADDED POOL HEATER RELAY ON 45TH FL. PER FJ-29571.
10	9/21/95	ED	REVISED PER FJ-29024-20
9	9-10-90	BD	ADDED 18 COMB'S/5PKRS/STR. ON 46 TH & 47TH FL PER FJ-29465
8	9-10-90	B.D	ADDED AFC-100 & COMB'S/5PKS/5TROBES, MANUAL STA, SMK DET, ON 45TH FL PER FJ-29484
7	9-9-90		ADDED WARDEN STATION AT 42 ND FL PER FJ-29027
6	7-9-90	BD	ADDED 11 SPKS/STR ON 44TH FL PER FJ-29103
5	7-9-90	BD	ADDED 9 SPKRS, STR. & MANUAL PULL PER FJ-29027
4	6-21-90	BD	ADDED 3 SPKR REVISIONS ON 42ND FL PER FJ-29155
3	4-4-90	JP	REVISED PER RETURN SUBMISSION
2	1-17-90	JP	REVISED PER CONTRACT DWG C-041-043 REV 7 & 41ST & 42ND FL AND #240 FLR CONTRACT DWG C-342.4 PER FJ-28027
1	10-20-89	JP	REVISED PER FJ-28829
		JP	REDRAWN / GENERAL REVISION

7 WORLD TRADE CENTER
NEW YORK, NEW YORK
41STFL. — ROOF

FIRE ALARM SYSTEM
RISER DIAGRAM

OWN. SJ
APP'VD.
ENGR. J P
CHD.
DATE 9-6-89
SCALE

FIRECOM INCORPORATED
FIRE CONTROL & DEV.

JOB NO. FJ-26840 SHEET 5 OF 6

124-5